SCD-XA333ES

SERVICE MANUAL

AEP Model

Ver 1.0 2001.06

Photo: Gold type

Model Name Using Similar Mechanism	NEW
CD Mechanism Type	CDM19IB-DVBU4B CDM19IN-DVBU4B
Base Unit Name	DVBU4B
Optical Pick-up Name	KHM-230AAA

SPECIFICATIONS

When a super audio CD is played

Playing frequency range 2 Hz to 100 kHz

Frequency response 2 Hz to 50 kHz (–3 dB)

Dynamic range 106 dB or more

Total harmonic distortion rate
0.0015 % or less

Wow and flutter Value of measurable limit (±0.001 % W. PEAK) or less

When a CD is played

Frequency response 2 Hz to 20 kHz

Dynamic range 100 dB or more

Total harmonic distortion rate
0.0018 % or less

Wow and flutter Value of measurable limit (±0.001 % W. PEAK) or less

Output connector

	Jack type	Output level	Load impedance
ANALOG OUT	Phono jacks	2 Vrms (at 50 kilohms)	Over 10 kilohms
DIGITAL(CD) OUT OPTICAL*	Square optical output connector	–18 dBm	(Light emitting wave length: 660 nm)
DIGITAL(CD) OUT COAXIAL*	Coaxial output connector	0.5 Vp-p	75 ohms
PHONES	Stereo phone jack	10 mW	32 ohms

*Output only the audio signals of the CD

General

Laser Semiconductor laser
(SACD: λ = 650 nm)
(CD: λ = 780 nm)
Emission duration: continuous

Laser radiant power: 5.47 uW at 650 nm
*These output is the value measured at a distance of about 200mm from the objective lens surface on the optical pick-up.

Power requirements 230 V AC, 50/60 Hz

Power consumption 27 W

Dimensions (w/h/d) 430 × 130 × 380 mm
incl. projecting parts

Mass (approx.) 9.5 kg

Supplied accessories

- Audio connecting cord
  phono jack × 2 (Red and White) ⟷ phono jack × 2 (Red and White) (2)
  phono jack × 1 (Black) ⟷ phono jack × 1 (Black) (2)
- Remote commander RM-SX700 (1)
- R06 (size-AA) batteries (2)

Design and specifications are subject to change without notice.

SUPER AUDIO CD PLAYER

9-873-151-01
2001F0500-1

© 2001.6

Sony Corporation
Home Audio Company
Shinagawa Tec Service Manual Production Group

SONY®

TABLE OF CONTENTS

1. SERVICING NOTES 3

2. GENERAL 6

3. DISASSEMBLY
3-1. Disassembly flow 9
3-2. Case 9
3-3. Loading Panel Assy 10
3-4. Front Panel Section 10
3-5. MAIN Board 11
3-6. Mechanism Deck (CDM19IB-DVBU4B, CDM19IN-DVBU4B), RF Board 11
3-7. Disc Table, Belt, Loading Motor (M1) 12
3-8. Optical Device (KHM-230AAA) 12
3-9. Base Unit (DVBU4B) 13

4. TEST MODE 14

5. DIAGRAMS
5-1. Block Diagram – RF/SERVO Section – 28
5-2. Block Diagram – MAIN Section (1/2) – 29
5-3. Block Diagram – MAIN Section (2/2) – 30
5-4. Block Diagram – AUDIO Section – 31
5-5. Block Diagram – DISPLAY/POWER SUPPLY Section – 32
5-6. Note for Printed Wiring Boards and Schematic Diagrams 33
5-7. Printed Wiring Boards – LOADING MOTOR/RF/SWITCH Boards – 34
5-8. Schematic Diagram – LOADING MOTOR/RF/SWITCH Boards – 35
5-9. Printed Wiring Board – MAIN Board (Component Side) – 36
5-10. Printed Wiring Board – MAIN Board (Conductor Side) – 37
5-11. Schematic Diagram – MAIN Board (1/5) – 38
5-12. Schematic Diagram – MAIN Board (2/5) – 39
5-13. Schematic Diagram – MAIN Board (3/5) – 40
5-14. Schematic Diagram – MAIN Board (4/5) – 41
5-15. Schematic Diagram – MAIN Board (5/5) – 42
5-16. Printed Wiring Board – AUDIO Board (Component Side) – 44
5-17. Printed Wiring Board – AUDIO Board (Conductor Side) – 45
5-18. Schematic Diagram – AUDIO Board (1/2) – 46
5-19. Schematic Diagram – AUDIO Board (2/2) – 47
5-20. Printed Wiring Board – DISPLAY Board – 48
5-21. Schematic Diagram – DISPLAY Board – 49
5-22. Printed Wiring Boards – D.OUT/ HP Boards – 50
5-23. Schematic Diagram – D.OUT/ HP Boards – 50
5-24. Printed Wiring Boards – JOG/KEY/R.CNTL Boards – 51
5-25. Schematic Diagram – JOG/KEY/R.CNTL Boards – 51
5-26. Printed Wiring Boards – IC-1/IC-2/POWER Boards – 52
5-27. Schematic Diagram – IC-1/IC-2/POWER Boards – 53
5-28. Printed Wiring Boards – AC/AC SW Boards – 54
5-29. Schematic Diagram – AC/AC SW Boards – 54
5-30. IC Pin Function Description 61

6. EXPLODED VIEWS
6-1. Case section 76
6-2. Front Panel Section 77
6-3. Chassis Section-1 78
6-4. Chassis Section-2 79
6-5. Mechanism Deck Section (CDM19IB-DVBU4B, CDM19IN-DVBU4B) 80
6-6. Base Unit Section (DVBU4B) 81

7. ELECTRICAL PARTS LIST 82

CAUTION
Use of controls or adjustments or performance of procedures other than those specified herein may result in hazardous radiation exposure.

This appliance is classified as a CLASS 1 LASER product.
The CLASS 1 LASER PRODUCT MARKING is located on the rear exterior.

The following caution label is located inside the unit.

Notes on chip component replacement

- Never reuse a disconnected chip component.
- Notice that the minus side of a tantalum capacitor may be damaged by heat.

Flexible Circuit Board Repairing

- Keep the temperature of the soldering iron around 270 ˚C during repairing.
- Do not touch the soldering iron on the same conductor of the circuit board (within 3 times).
- Be careful not to apply force on the conductor when soldering or unsoldering.

SAFETY-RELATED COMPONENT WARNING!!

COMPONENTS IDENTIFIED BY MARK ⚠ OR DOTTED LINE WITH MARK ⚠ ON THE SCHEMATIC DIAGRAMS AND IN THE PARTS LIST ARE CRITICAL TO SAFE OPERATION. REPLACE THESE COMPONENTS WITH SONY PARTS WHOSE PART NUMBERS APPEAR AS SHOWN IN THIS MANUAL OR IN SUPPLEMENTS PUBLISHED BY SONY.

SECTION 1
SERVICING NOTES

NOTES ON HANDLING THE OPTICAL PICK-UP BLOCK OR BASE UNIT

The laser diode in the optical pick-up block may suffer electrostatic break-down because of the potential difference generated by the charged electrostatic load, etc. on clothing and the human body.
During repair, pay attention to electrostatic break-down and also use the procedure in the printed matter which is included in the repair parts.
The flexible board is easily damaged and should be handled with care.

NOTES ON LASER DIODE EMISSION CHECK

The laser beam on this model is concentrated so as to be focused on the disc reflective surface by the objective lens in the optical pick-up block. Therefore, when checking the laser diode emission, observe from more than 30 cm away from the objective lens.

CLEANING OF OPTICAL PICK-UP LENS

In cleaning the lens of optical pick-up, use the air blower.
Never use a cotton swab for cleaning the lens of optical pick-up, which otherwise causes a trouble.

RESETTING OPERATION AT POWER ON

If the power is turned on with a disc loaded in the set, a sequence of operation as shown below will be performed.
(The operation varies depending on the type of disc)
Condition: continue mode

(1) CD

1. Sled reverse move (sled in)
2. Disc detect
3. IC setting for CD
4. Servo error signal offset auto adjustment
5. Spindle kick for LD on
6. LD on
7. Focus search
8. Focus servo on
9. Spindle kick
10. Spindle servo on
11. E-F balance auto adjustment
12. Tracking & sled servo on
13. Focus bias auto adjustment
14. Focus servo gain auto adjustment
15. Tracking servo gain auto adjustment
16. Jump to lead-in area
17. Read TOC
18. Stop

(2) SACD (single layer)

1. Sled reverse move (sled in)
2. Disc detect
3. IC setting for SACD
4. Servo error signal offset auto adjustment
5. Spindle kick for LD on
6. LD on
7. Focus search
8. Focus servo on
9. Spindle kick
10. Spindle servo on
11. E-F balance auto adjustment
12. Tracking & sled servo on
13. Focus bias auto adjustment
14. Focus servo gain auto adjustment
15. Tracking servo gain auto adjustment
16. Jump to lead-in area
17. Read TOC
18. Stop

(3) SACD (dual layer)

1. Sled reverse move (sled in)
2. Disc detect
3. IC setting for SACD
4. Servo error signal offset auto adjustment
5. Spindle kick for LD on
6. LD on
7. Focus search
8. Focus servo on (layer 0)
9. Spindle kick
10. Spindle servo on
11. E-F balance auto adjustment (layer 0)
12. Tracking & sled servo on (layer 0)
13. Focus bias auto adjustment (layer 0)
14. Focus servo gain auto adjustment (layer 0)
15. Tracking servo gain auto adjustment (layer 0)
16. Jump to lead-in area
17. Read TOC
18. Focus jump (layer 0→layer 1)
19. E-F balance auto adjustment (layer 1)
20. Tracking & sled servo on (layer 1)
21. Focus bias auto adjustment (layer 1)
22. Focus servo gain auto adjustment (layer 1)
23. Tracking servo gain auto adjustment (layer 1)
24. Focus Jump (layer 1→layer 0)
25. Stop

HOW TO OPEN THE DISC TABLE WHEN POWER SWITCH TURNS OFF

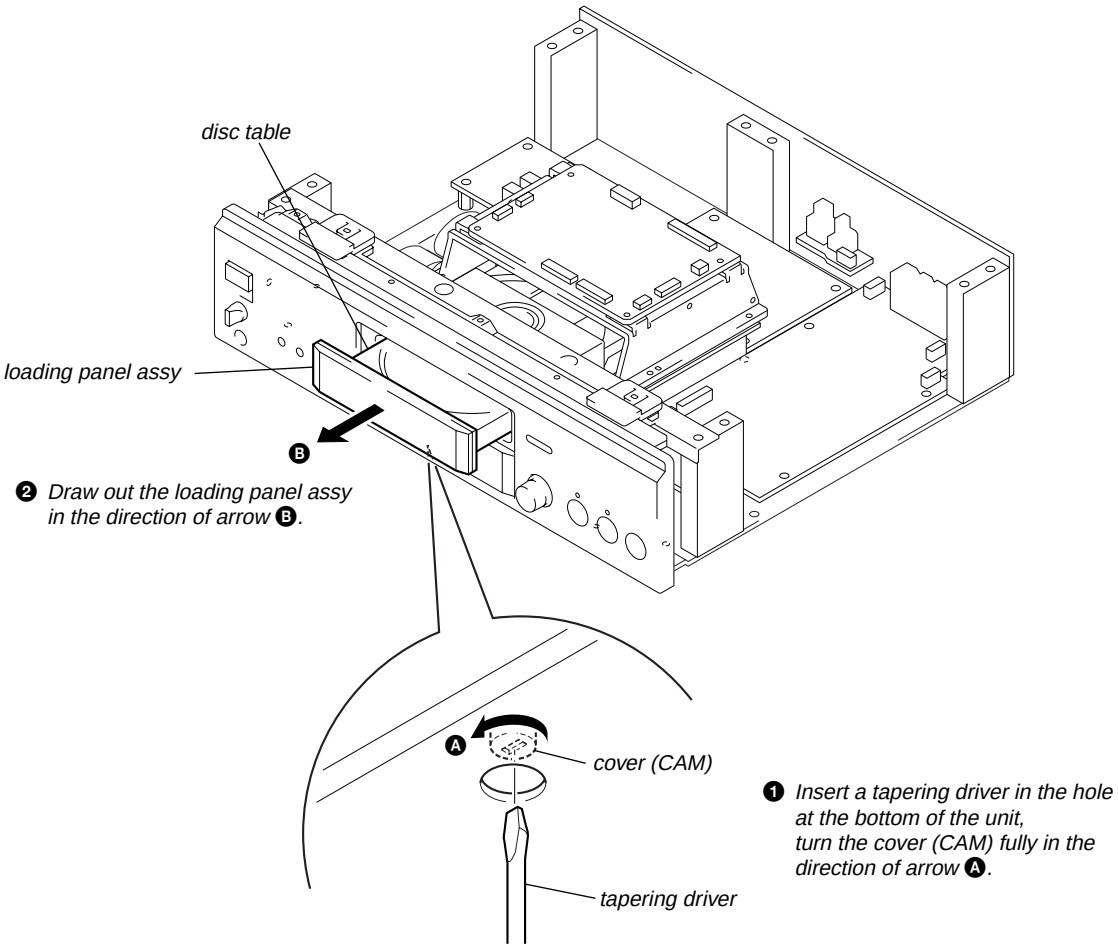

OPTICAL PICK-UP SERVICE POSITION

Place the insulator on the MAIN board, then install the base unit (DVBU4B) on it as shown in the figure.

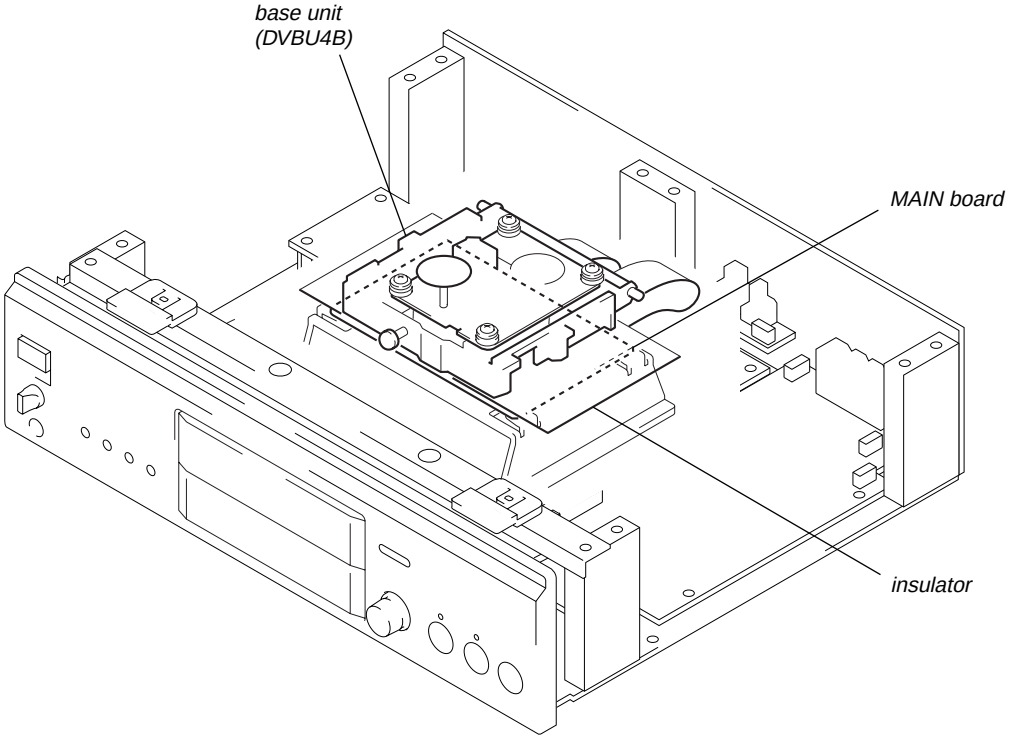

CABLE SETTING

When connecting the cable from transformer to POWER board, set it as shown in the figure.

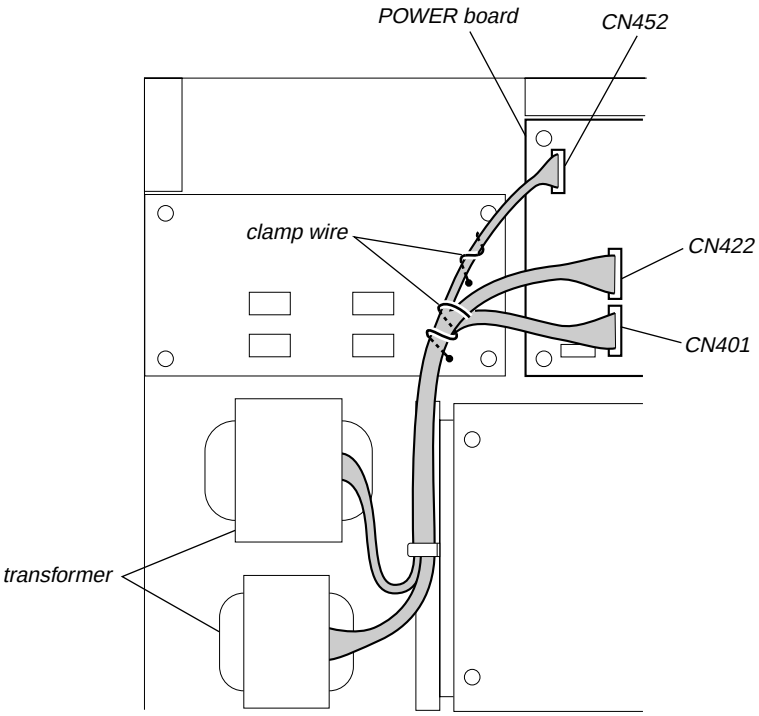

This section is extracted from instruction manual.

Front Panel Parts Descriptions

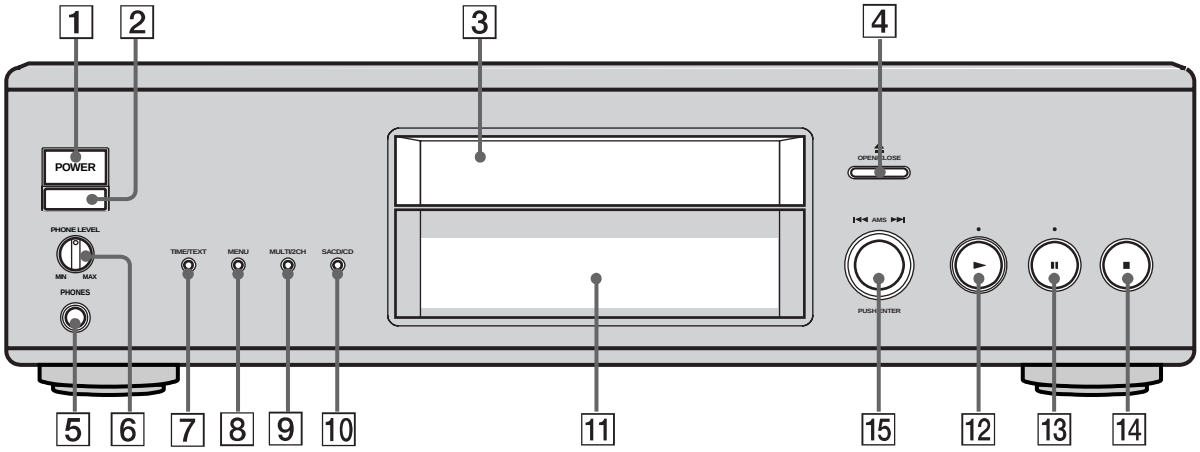

1 **POWER switch (14)**
Press to turn on the player.

2 **Remote sensor (4)**

3 **Disc tray (14)**
Press ≜ OPEN/CLOSE to open/close the disc tray.

4 **≜ OPEN/CLOSE button (14)**
Press to open the disc tray.

5 **PHONES**
Connect the headphones.
During playback of a Multi-channel SuperAudio CD, the same signal that is output from the ANALOG 5.1CH FRONT L/R jacks is output from the PHONES jack.

6 **PHONE LEVEL**
Adjust the headphones volume.

7 **TIME/TEXT button (15)**
Each time you press the button, the playing time of the track, the total remaining time on the disc, or TEXT information appears in the display

8 **MENU (13)**
Press to enter the menu.

9 **MULTI/2CH button (with an LED) (14)**
Each time you press the button while the 2 channel+ Multi-channel SuperAudio CD (page 13) is loaded, the playback area changes between the multi-channel playback area (the LED turns on) and 2 channel playback area (the LED turns off).

10 **SACD/CD button (with an LED) (14)**
Each time you press the button while the Hybrid disc (page 13) is loaded, the layer changes between the HD layer (the LED turns on) and CD layer (the LED turns off).

11 **Display window (15)**
Shows various information.

12 **► button (14)**
Press to start play.

► indicator
Lights up during playback.

13 **❚❚ button (14)**
Press to pause play.

❚❚ indicator
Lights up during pause.

14 **■ button (14)**
Press to stop play.

15 **⏮ AMS ⏭ dial (AMS: Automatic Music Sensor) (13)**
When you turn the ⏮ AMS ⏭ dial counterclockwise by one click, you go back to the preceding track; when you turn the ⏮ AMS ⏭ dial clockwise by one click, you go to the succeeding track.

Rear Panel Parts Descriptions

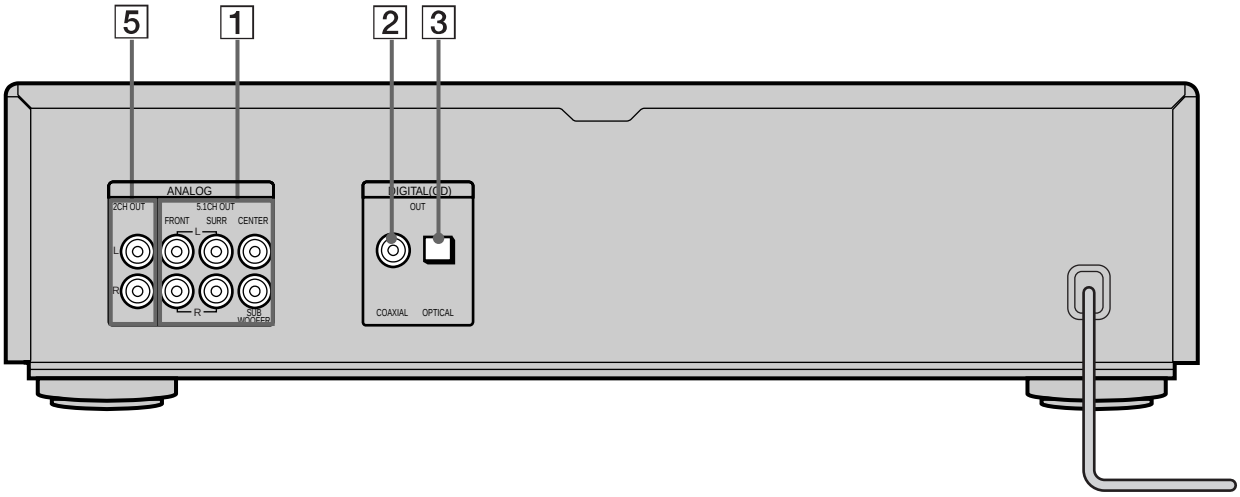

1 **ANALOG 5.1CH OUT jacks (5)**
Connect to an amplifier equipped with the 5.1CH input jacks (Multi-channel amplifier, AV amplifier, etc.) using the audio connecting cords.

2 **DIGITAL (CD) OUT COAXIAL connector (7)**
Connect to an audio component using the coaxial digital cable.

3 **DIGITAL (CD) OUT OPTICAL connector (7)**
Connect to an audio component using an optical digital cable.

5 **ANALOG 2CH OUT L/R jacks (6)**
Connect to an audio component (stereo/2 channel) using the audio connecting cord.

Note
Only the audio signals of the CD can be output from the DIGITAL (CD) OUT connectors shown in 2 and 3. Those of the Super Audio CD cannot be output through DIGITAL (CD) OUT

Remote Parts Descriptions

1 **CONTINUE button (20)**
Press to resume normal play from Shuffle Play or Programme Play.

SHUFFLE button (20)
Press to select Shuffle Play.

PROGRAM button (21)
Press to select Programme Play.

2 **DISPLAY MODE button (16)**
Press to turn off the information.

3 **TIME/TEXT button (15)**
Each time you press the button, the playing time of the track, the total remaining time on the disc, or TEXT information appears in the display.

4 **Number buttons (18)**
Press to enter the track numbers.

5 **>10 button (18)**
Press to locate a track numbered over 10.

6 **REPEAT button (19)**
Press repeatedly to play all tracks or only one track on the disc.

7 **A↔B button (20)**
Press to select Repeat A-B Play.

8 **▷ button (14)**
Press to start play.

❚❚ button (14)
Press to pause play.

■ button (14)
Press to stop play.

9 **AMS ⏮/⏭ (AMS: Automatic Music Sensor) buttons (18)**
Press to locate a specific track.

10 **◀◀/▶▶ buttons (18)**
Press to locate a portion you want to play within a track.

11 **INDEX ⏶/⏷ buttons (18)**
Press to locate a specific point marked with an index signal when you play a disc that has index signals.

12 **SACD/CD button (14)**
Each time you press the button, ”SACD“ or ”CD“ appears in the display. Select the type of CD you want to play.

13 **MULTI/2CH button (14)**
Press to select the playback area when the 2 channel + Multi-channel Super Audio CD (page 13) is loaded.

14 **ENTER button (25)**
Press to decide the selection.

15 **CLEAR button (21)**
Press to delete a programmed track number.

16 **LEVEL ADJ button (25)**
Press to adjust the output level balance for the Multi-channel management function (page 23).

17 **CHECK button (21)**
Press to check the programmed order.

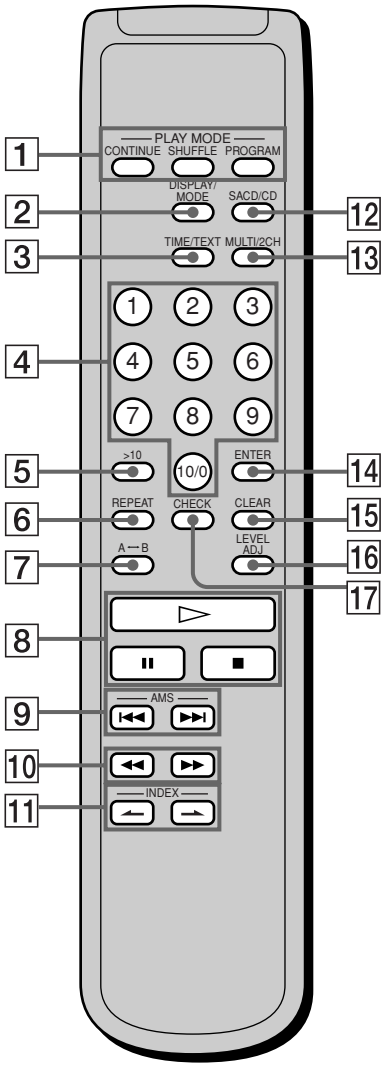

SECTION 3
DISASSEMBLY

• This set can be disassembled in the order shown below.

3-1. DISASSEMBLY FLOW

Note 1: *The process described in ⊟ can be performed in any order.*
Note 2: *Without completing the process described in ⊟, the next process can not be performed.*
Note 3: *Illustration of disassembly is omitted.*

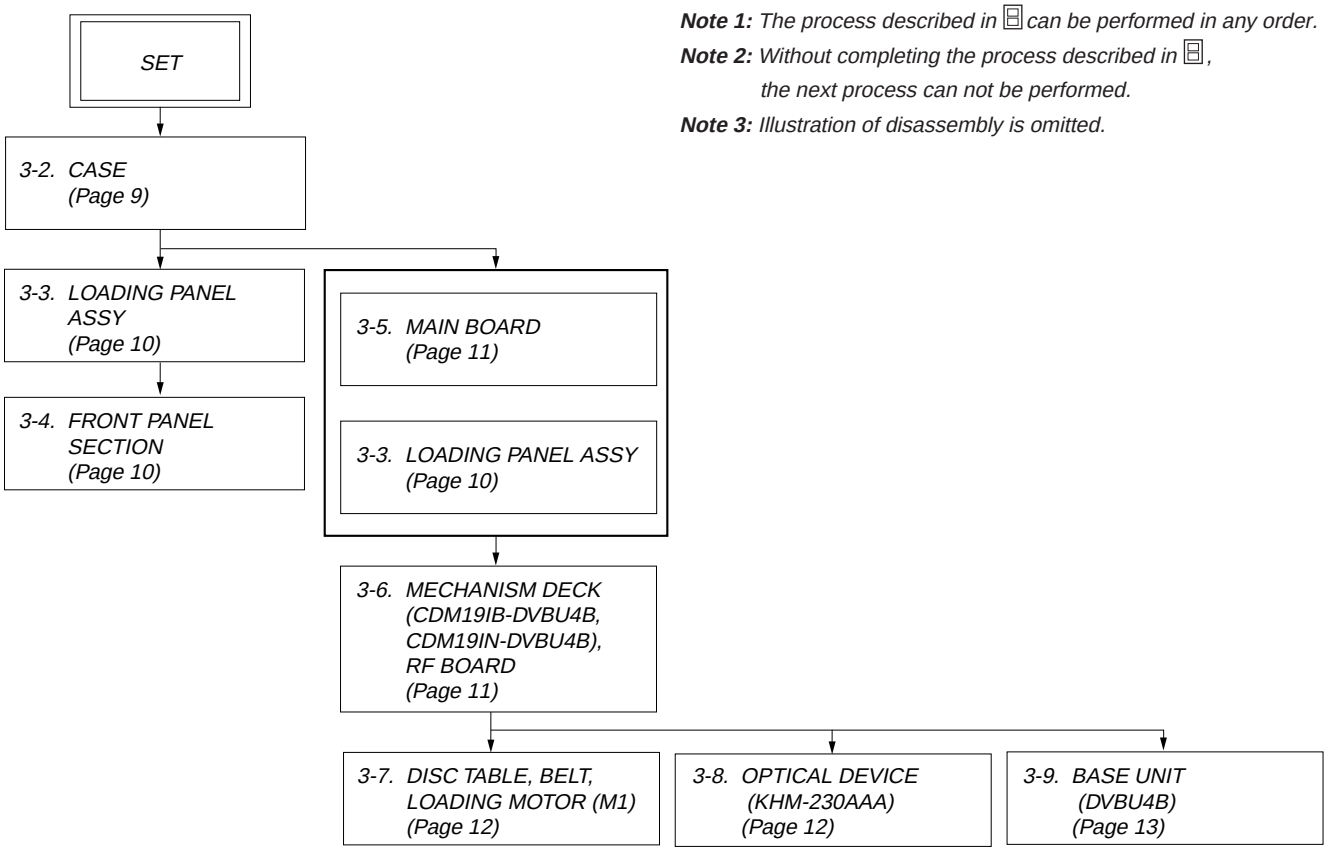

Note: Follow the disassembly procedure in the numerical order given.

3-2. CASE

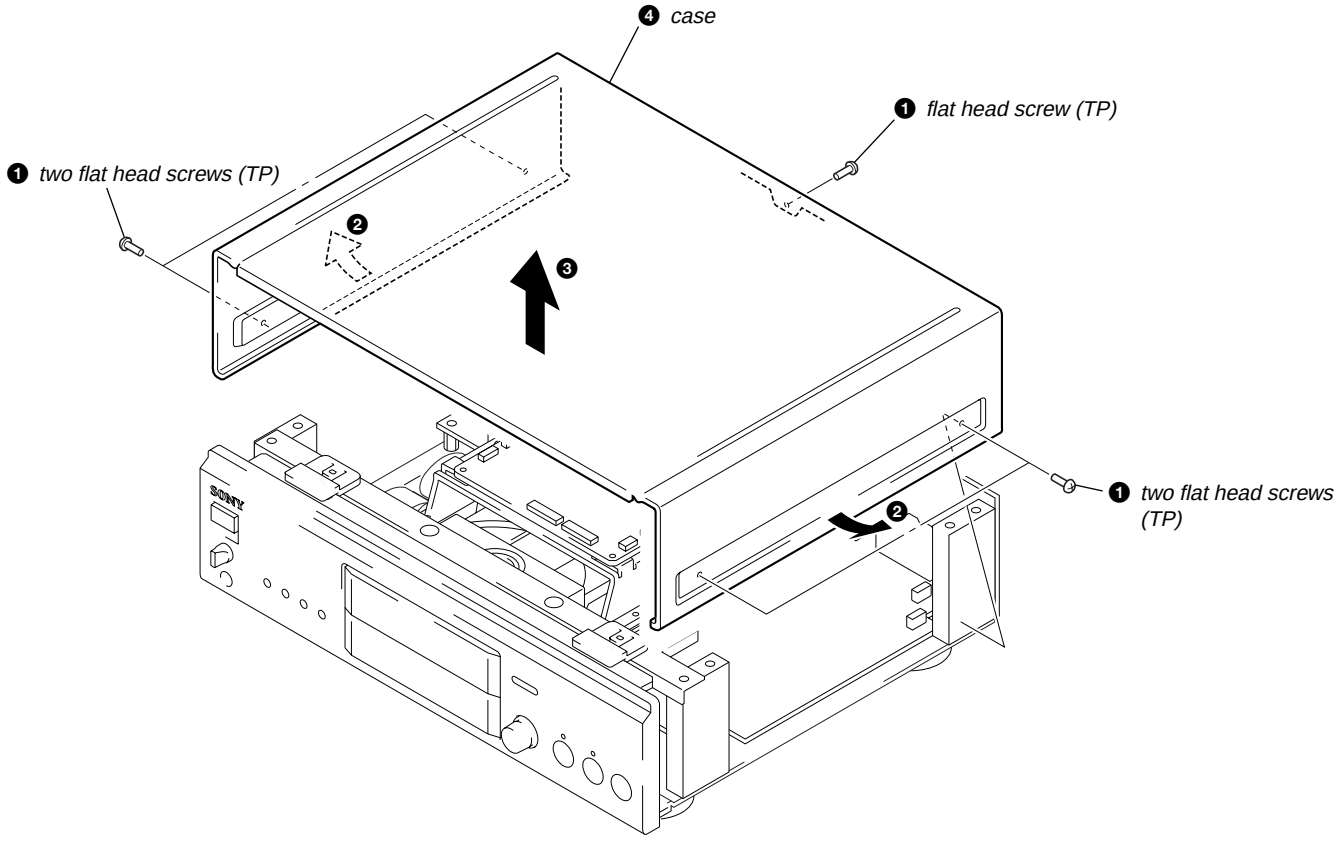

3-3. LOADING PANEL ASSY

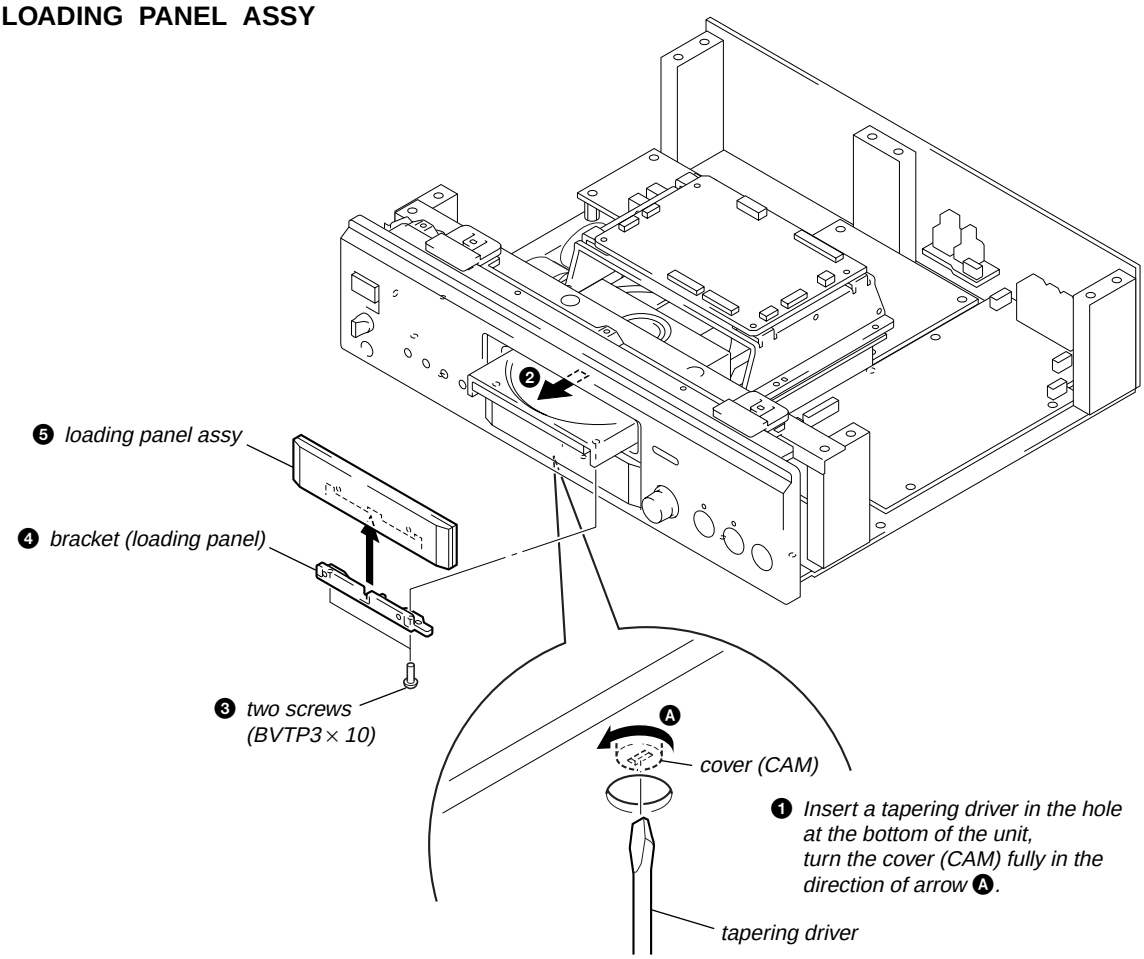

3-4. FRONT PANEL SECTION

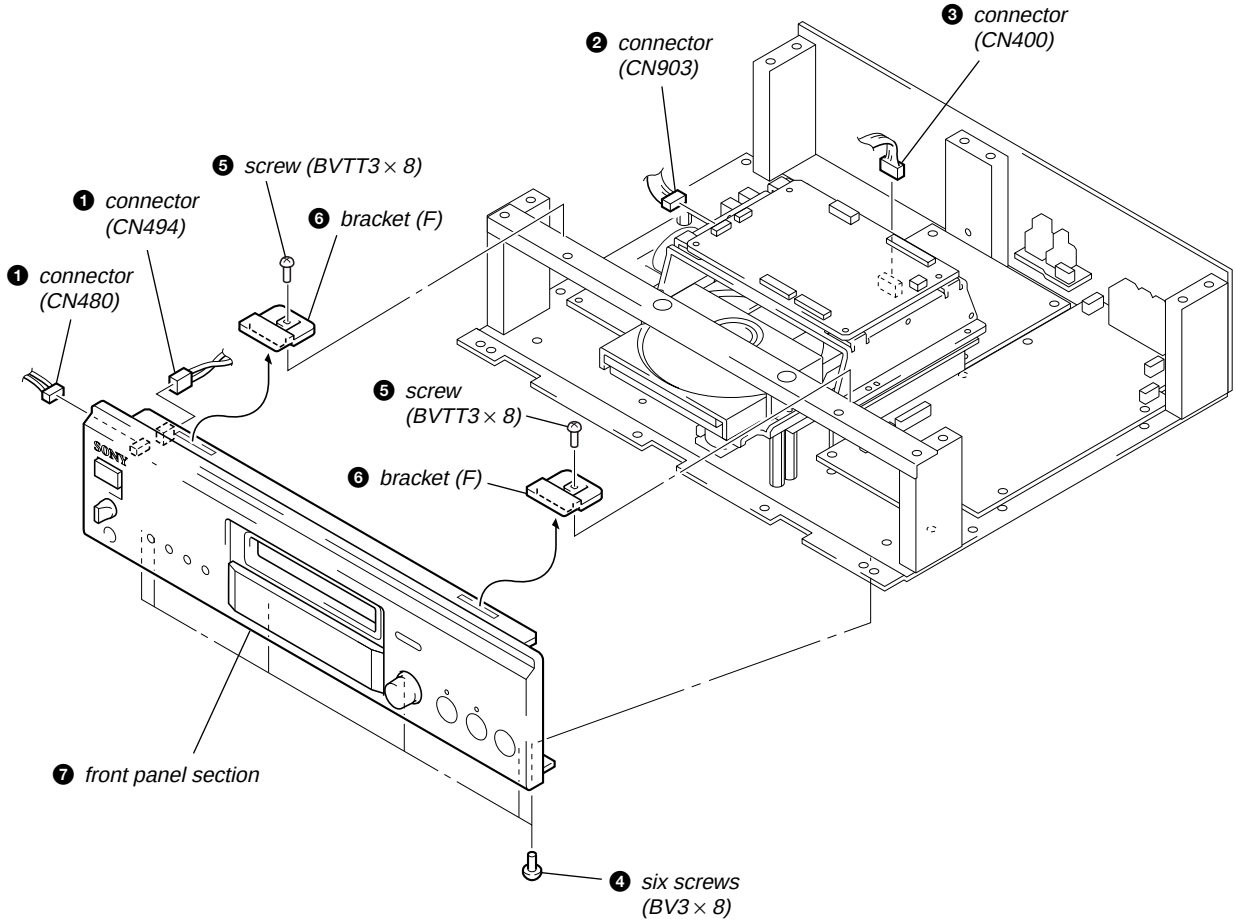

3-5. MAIN BOARD

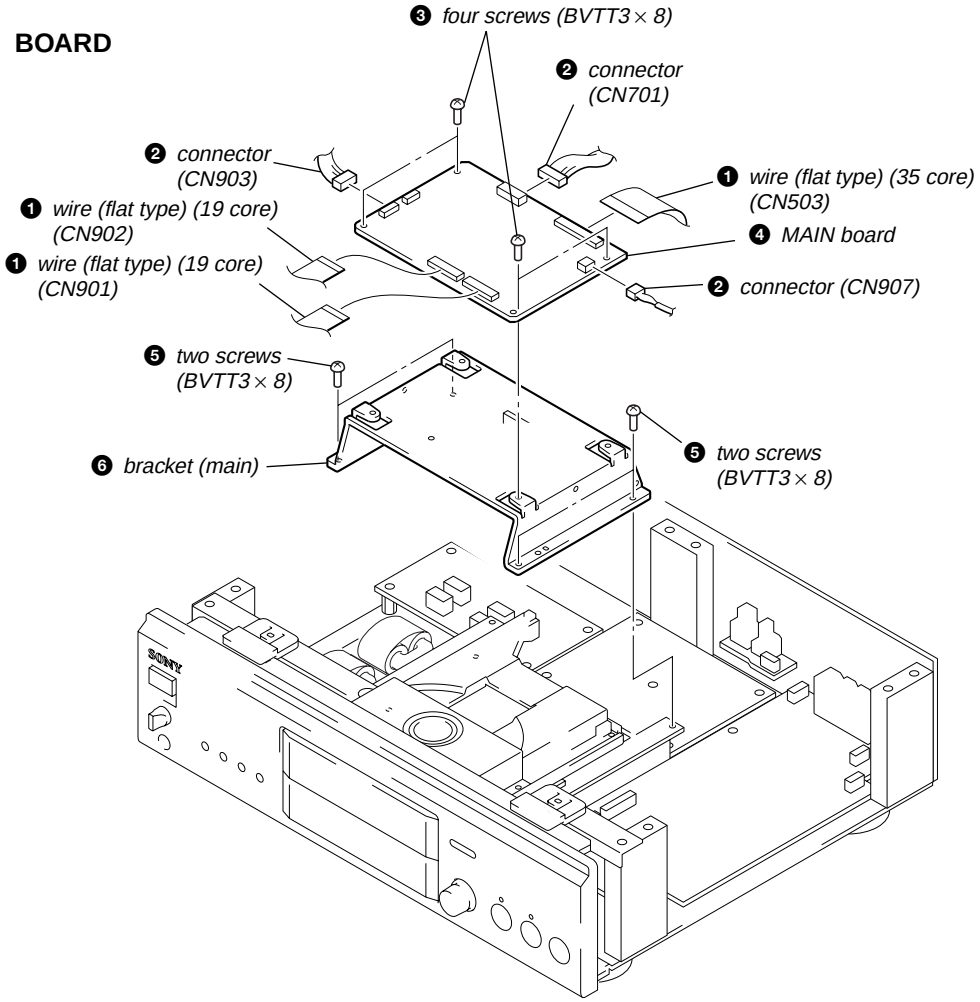

3-6. MECHANISM DECK (CDM19IB-DVBU4B, CDM19IN-DVBU4B), RF BOARD

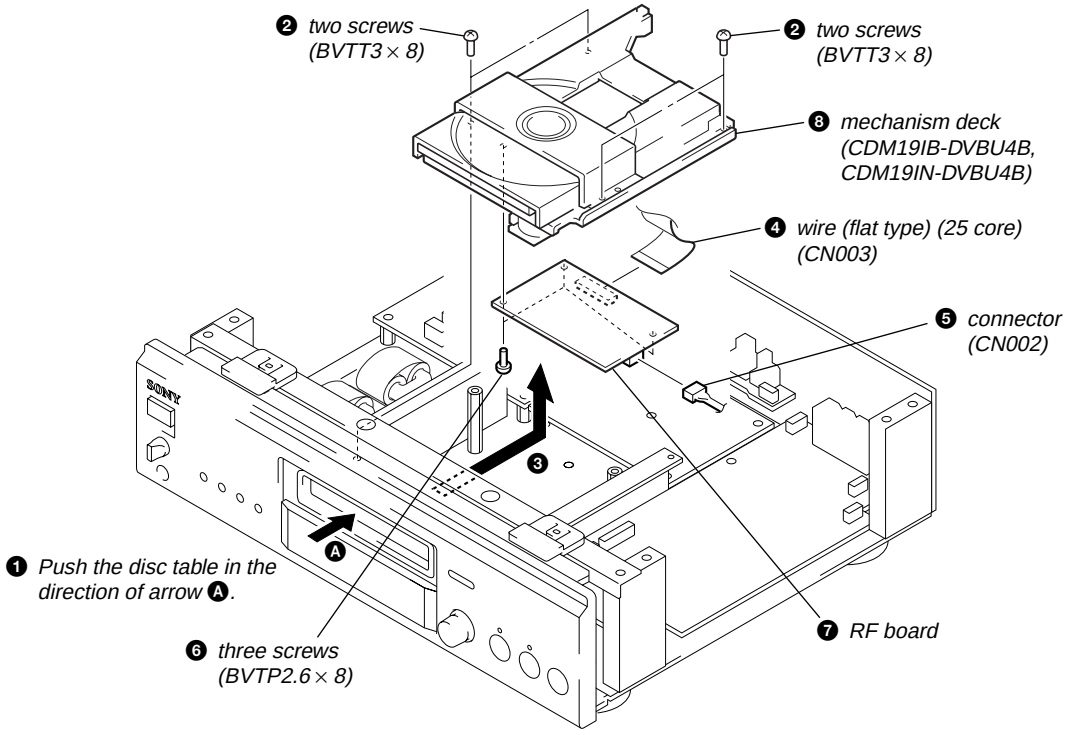

3-7. DISC TABLE, BELT, LOADING MOTOR (M1)

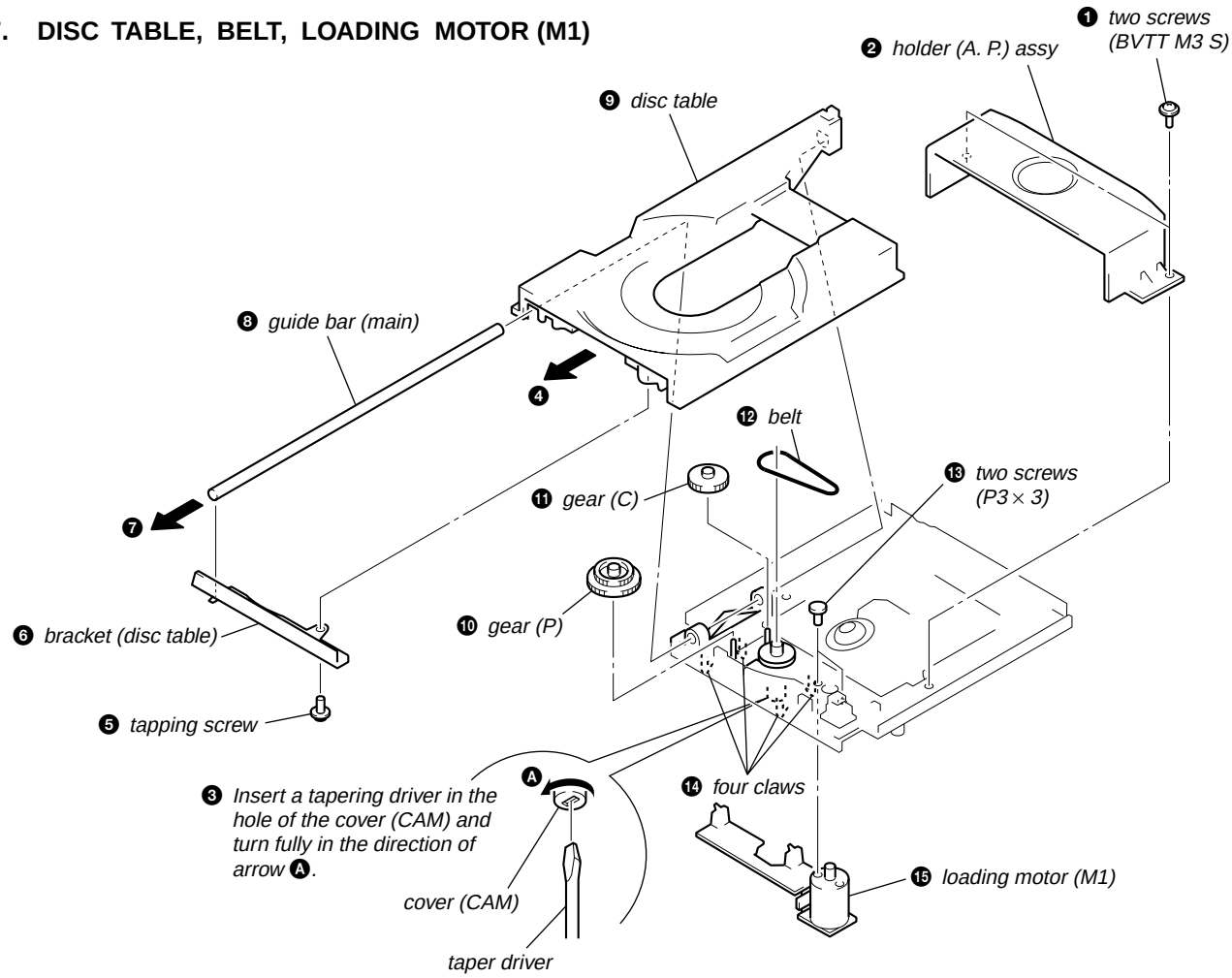

3-8. OPTICAL DEVICE (KHM-230AAA)

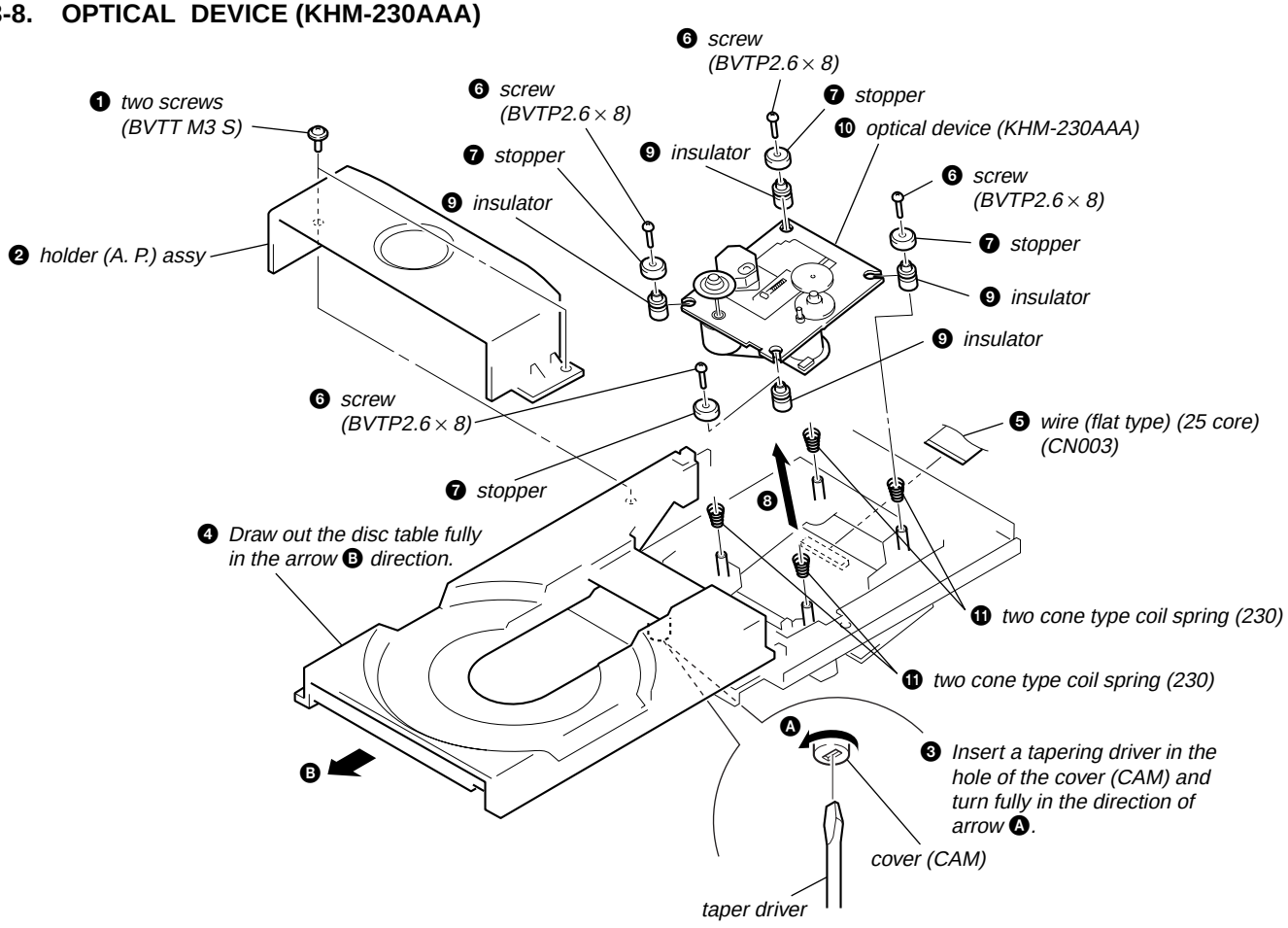

3-9. BASE UNIT (DVBU4B)

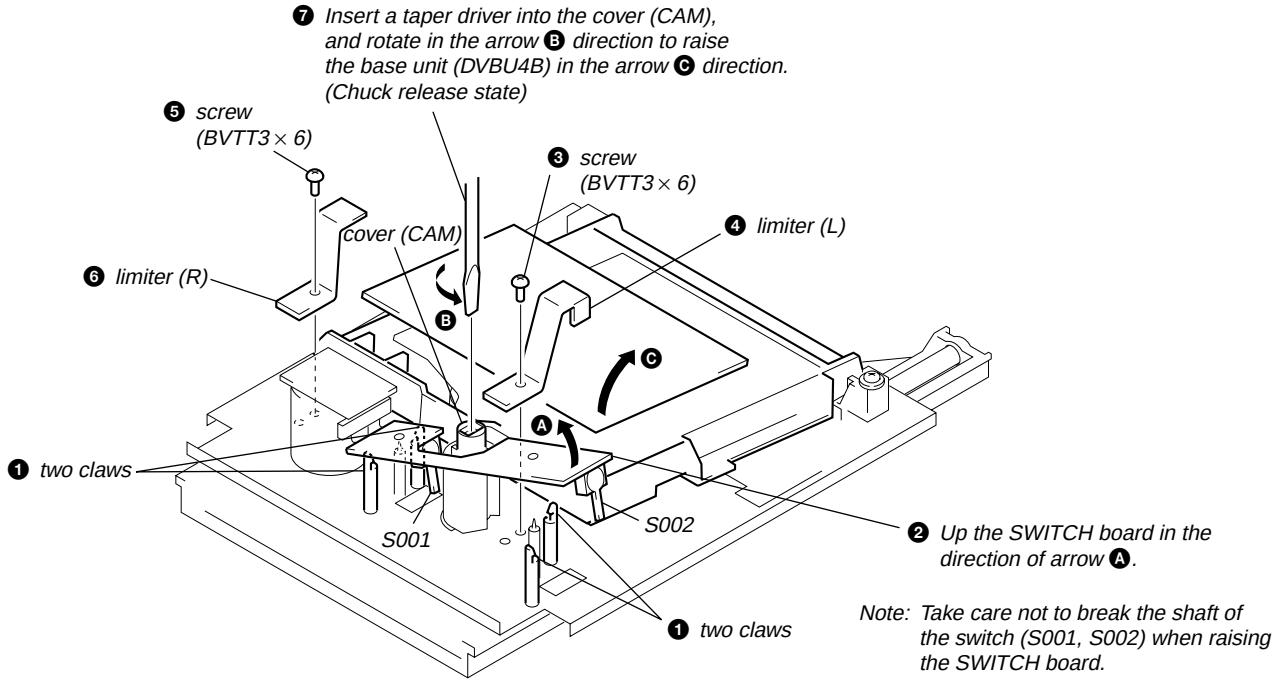

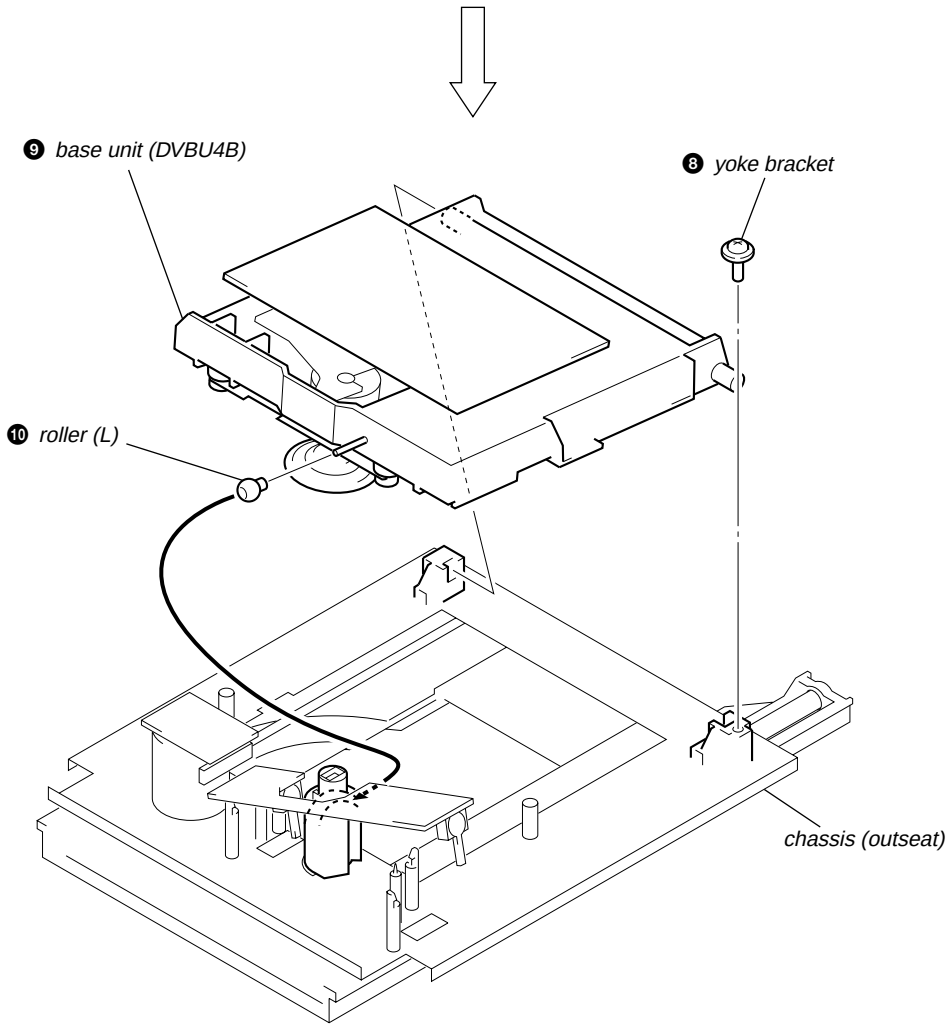

SECTION 4
TEST MODE

FLUORESCENT INDICATOR TUBE MODE

Procedure:

1. Press the POWER button while shorting the TP (TEST MODE) on the DISPLAY board, and turn on the power so that the following operations will be executed automatically.

   ① Grid of all segments lights up sequentially starting from 1G to 16G.
   ② The vertical line (total 5 lines) of all grids lights up sequentially in the range of 3G to 16 G starting from the left.
   ③ The horizontal line of (total 7 lines) of all grids lights up sequentially in the range of 3G to 16G starting from the top.
   ④ Grids from 5G to 6G go off.

2. With the machine in the status that is set in step 1-④, press any on the remote commander. The grids 1G and 2G go off and then the machine enters the key check standby state. (When the OPEN/CLOSE key or the ■ key is pressed, the reception check is canceled.)

3. After the key check is completed, turn JOG clockwise to turn on the calendar segments sequentially. When the segment "20" is confirmed, turn JOG counter-clockwise that turns off the calendar segment. When the segment "1" is confirmed, this is the end of check.

4. After all the checks are completed, confirm to see that the display "!%%TEST-END!!%" appears. The message indicates that the check is ended normally.

5. Press the POWER button to turn off the main power and disconnect the power plug from the wall outlet.

Grid Assignment:

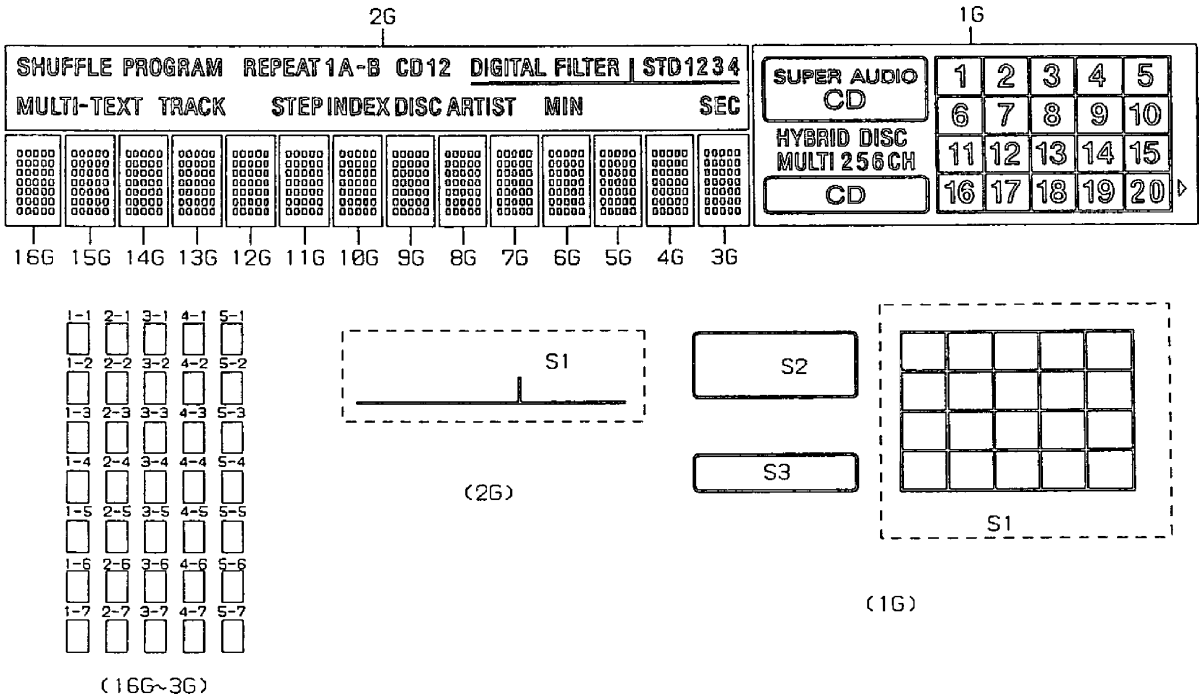

Shorting Location:

– DISPLAY Board (Conductor Side) –

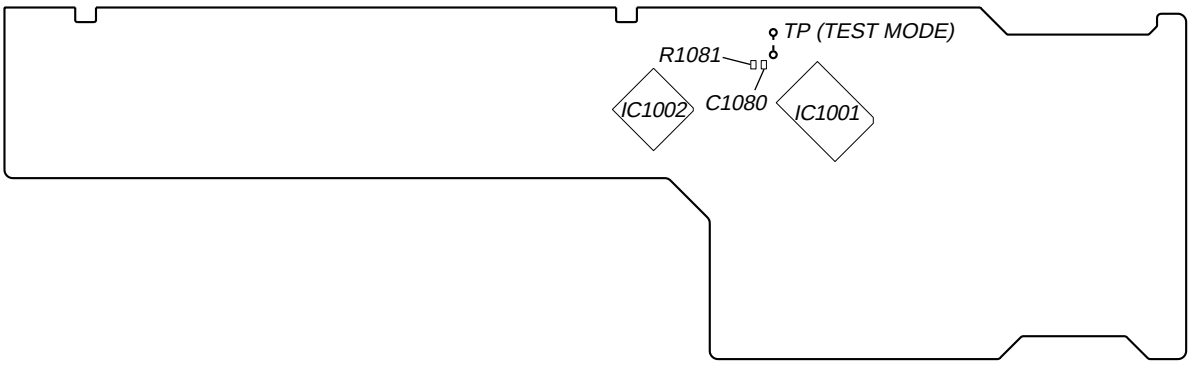

This set automatically executes self-diagnosis and various checks by entering the test mode.

Note: This set automatically makes various adjustments according to the type of disc, thereby not requiring adjustment of the set when parts were replaced. However, be sure to execute 4-1. IC AND FLUORESCENT DISPLAY TUBE CHECK, 4-2. AUTO CHECK and 4-7. WAVEFORMS CHECK.

Disc for Test Mode

Various checks of this set require the following discs.

Model	Type *1	Category	Application
MODEL SATD-S5 (J-2501-215-A) SATD-S4 (J-2501-184-A)	SL	12 cm disc Reference disc	Adjusted value check, Operation check, Optical waveform check
Not specified	DL	12 cm disc	Operation check
PATD-012 (4-225-203-01) YEDS-18 (3-702-101-01)	CD	12 cm disc Reference disc	Adjusted value check, Operation check, Optical waveform check
Not specified	HYBRID	12 cm disc	Operation check

*1 SL: Single Layer
DL: Dual Layer

Setting Method of Test Mode

Turn the POWER switch on while pressing the ⏮AMS⏭ dial and the TIME/TEXT button. Release the TIME/TEXT button and the ⏮ AMS ⏭ dial in this order when "TEST MODE Menu" is displayed on the fluorescent display tube. (If the ⏮AMS⏭ dial is released first, the test mode becomes active but "TEST MODE Menu" is not displayed)

Releasing Method of Test Mode

To release the test mode, turn the POWER switch off.

Selection/Entry of Test Mode

To select and enter the "TEST MODE Menu", operate as follows.

1. Rotate the ⏮ AMS ⏭ dial to select the menu, and press the ⏮ AMS ⏭ dial to enter.
2. The test is switched on or off alternately each time the ⏮ AMS ⏭ dial is pressed.
3. To return to the previous step, rotate the ⏮ AMS ⏭ dial to select the desired item, and press the ⏮ AMS ⏭ dial to enter.

Test Mode Command List

The contents of test mode are as follows.

Note: Wrong operation in the test mode causes a trouble, thus requiring extreme care.

LINE command (1X): Use mainly for a manufacturing line.

No.	Name	Description	Remarks
05	DSP MON1	XUGF, XPCK, C2PO outputted from IC509 (CD DSP)	Not used for the servicing
06	DSP MON2	MNT0, MNT1, MNT2, MNT3 outputted from IC509 (CD DSP)	Not used for the servicing
07	DSP MON3	RFCK, XPCK, XROF, GTOP outputted from IC509 (CD DSP)	Electrical measurement, CD CLV jitter measurement

STANDARD command (1X): Use when the servo is applied by manual operation.

No.	Name	Description	Remarks
12	LD ON/OFF	The laser diode is turned on or off	On or off are switched alternately
13	SPIN ON/OFF	The spindle motor is rotated with the regulated voltage	On or off are switched alternately
14	FSRV ON/OFF	The focus servo is turned on or off	On or off are switched alternately
15	TSRV ON/OFF	The tracking servo is turned on or off	On or off are switched alternately
16	CLV ON/OFF	The spindle SLV servo is turned on or off Focus and tracking servos must be already turned on	On or off are switched alternately
17	SSRV ON/OFF	The sled servo is turned on or off Focus, tracking and spindle servos must be already turned on	On or off are switched alternately
18	ALL SRV ON	All servos are turned on	
19	ALL SRV OFF	All servos are turned off	Stop command in the test mode

FOCUS command (2X): Focus related. (All servos must be already turned on (except command 21))

No.	Name	Description	Remarks
21	FSRCH ON/OFF	The continuous vertical motion of the optical pick-up lens is turned on or off	Avoid a long-time use
22	F-BIAS UP	Increase focus bias	Focus bias value
23	F-BIAS DOWN	Decrease focus bias	Focus bias value
24	ADJ FCSBIAS	The focus bias is adjusted automatically Both + and - directions are searched to search for best jitter point	
25	FGAIN UP/DW	The focus servo gain is switched between normal and down	Normal or down are switched alternately
26	FJMP UP/DWN	Focus jump is executed UP: layer 0→1, DOWN: layer 1→0	Valid only for DL
27	FOCUS AGC	The focus servo gain is adjusted automatically	
28	DISP FBdata	The focus bias adjusted value is displayed	Hexadecimal display 9 bit data

Note: On or off and up or down are switched alternately

OFFSET (PI, FE, TE) command (3X): Adjusts the offset of PI, FE and TE signals.

No.	Name	Description	Remarks
31	PI/FE OFSET	Adjusts the offset of PI, FE and TE signals This adjustment must be executed after 61 DISC DETECT	TE offset adjustment is executed for the CD only

TRACKING command (4X): Tracking servo related.

No.	Name	Description	Remarks
41	TGAIN NM/UP	The tracking servo gain is switched between normal and up	Normal or up are switched alternately
44	ADJ TRK DSP	The traverse AGC and E-F balance adjustment is performed	
45	TRACKING AGC	The tracking servo gain is adjusted automatically	

SEARCH command (5X): Track search related. (Nos. 51 through 53 are not used for the servicing.)

No.	Name	Description	Remarks
51	1-TRCK JUMP	One-track jump is performed	
52	M-TRCK MOVE	M-track movement is performed	
53	FINE SEARCH	Fine search is performed	
58	CDM Check	Measurement of table rotation hours, tray open/close hours and panel door open close hours	
59	Table Init	Initializes the table.	After this command, the OPEN/CLOSE key is enabled.

DISC DETECT command (6X): Disc type check related.

No.	Name	Description	Remarks
61	DISC DETECT	Disc type check is executed Display after judgment DSKMOD CD: Judged as CD DSKMOD SL: Judged as SACD (SL) DSKMOD DL: Judged as SACD (DL) DSKMOD HLHD: Judged as HYBRID HD DSKMOD CDRW: Judged as CD-RW	Refer to how to apply servo by manual operation (17 page)
62	SET DISC CD	Enter disc type CD setting	CD forced setting
63	SET DISC SL	Enter disc type SL setting	SL forced setting
64	SET DISC DD	Enter disc type DD setting	DD forced setting
65	SET DISC HH	Enter disc type HYBRID HD setting	HD forced setting
66	SET DISC HC	Enter disc type HYBRID CD setting	CD forced setting

TOOLS command (8X): Performs aging, reads adjusting parameters, etc.

No.	Name	Description	Remarks
81	VERSION	Firmware version is displayed	Example: Ver 1.00
83	TRAY AGING	Tray open-close aging is performed Not used for the servicing	Number of times and eccentricity measurement Not used in this set.
84	JITTER	Jitter measurement	Not used for the servicing
85	ERROR RATE	Error rate measurement CD: C1, C2 SACD: PO, PI1, PI2	Error rate Not used for the servicing
86	ALL SRV ON	Apply all servos Full automatic measurement including PI, FE and TE offset adjustment is performed	Use when applying the servo by manual operation Refer to STANDARD command (15 page)
87	DISP ADJ DT	Automatic adjusting parameters are displayed The offset adjusted values are scroll-displayed in order of RF, VC, FE and TE	Refer to auto check items (20 page) Refer to auto check items (20 page)
8d	Set Up Init	Set to factory shipping mode PLAY, REPEAT, DIGIFIL, etc. are initialized	Set when repair completed Refer to 4-6. SHIPPING MODE (24 page)
8F	49 TRCK JIT	Used for jitter measurement of 49th music on SACD-S4	For manufacturing line Not used for the servicing

QA command (9X)

No.	Name	Description	Remarks
92	SET CHECK	The set is checked	Refer to 4-2. AUTO CHECK (20 page)
94	SET AGING	The set aging is performed Repeat by the specified number of times or until an error occurred	Refer to 4-5. AGING MODE (24 page)
95	DISPLAY ERROR	The content of error recorded to the set is read and displayed (Error recording) Only one item is recorded	
96	D-OUT OnOff	Digital out of CD is turned on or off	Not used in this set.
98	APDO JITTER		Not used for the servicing
9C	BU DENCHO	The content of error recorded to the set is read, and then the S curve waveform, traverse waveform, and RF waveform can be checked successively	Refer to 4-7.WAVEFORMS CHECK (26 page)
9D	P-ON HOUR	Approximate cumulative power supplying time is displayed (Initialized by 8d command)	In unit of 1 hour
9E	RFD OUT	RFD output is turned on or off SACD jitter measuring mode	Not used for the servicing

How to Apply Servo by Manual Operation

In analyzing failures of the set, the servo may be applied by manual operation. To apply servo in the test mode, use the following method.

1. After setting the test mode, rotate the ⏮ AMS ⏭ dial to select a command, and press the ⏮ AMS ⏭ dial to enter.
2. "61 DISC DETECT" (Disc type check)→"86 ALL SRV ON" (All servos on + auto adjustment)
3. If applying servo while checking the condition one by one, "61 DISC DETECT" (Disc type check)→"31 PI/FE OFSET" (Offset automatic adjustment)→"14 FSRV ON/OFF" (Focus servo on)→"16 CLV ON/OFF" (CLV servo on)→"44 ADJ TRK DSP " (E-F balance adjustment)→"15 TSRV ON/OFF" (Tracking servo on)→"17 SSRV ON/OFF" (Sled servo on)→"24 ADJ FCSBIAS" (Focus bias adjustment)→"27 FOCUS AGC" (Focus auto gain adjustment)→"45 TRACKING AGC" (Tracking auto gain adjustment).

Note: 1. On and off are alternately switched in the same command.
2. For a stop, select "19 ALL SRV OFF" and press the ⏮ AMS ⏭ dial.

Set Check

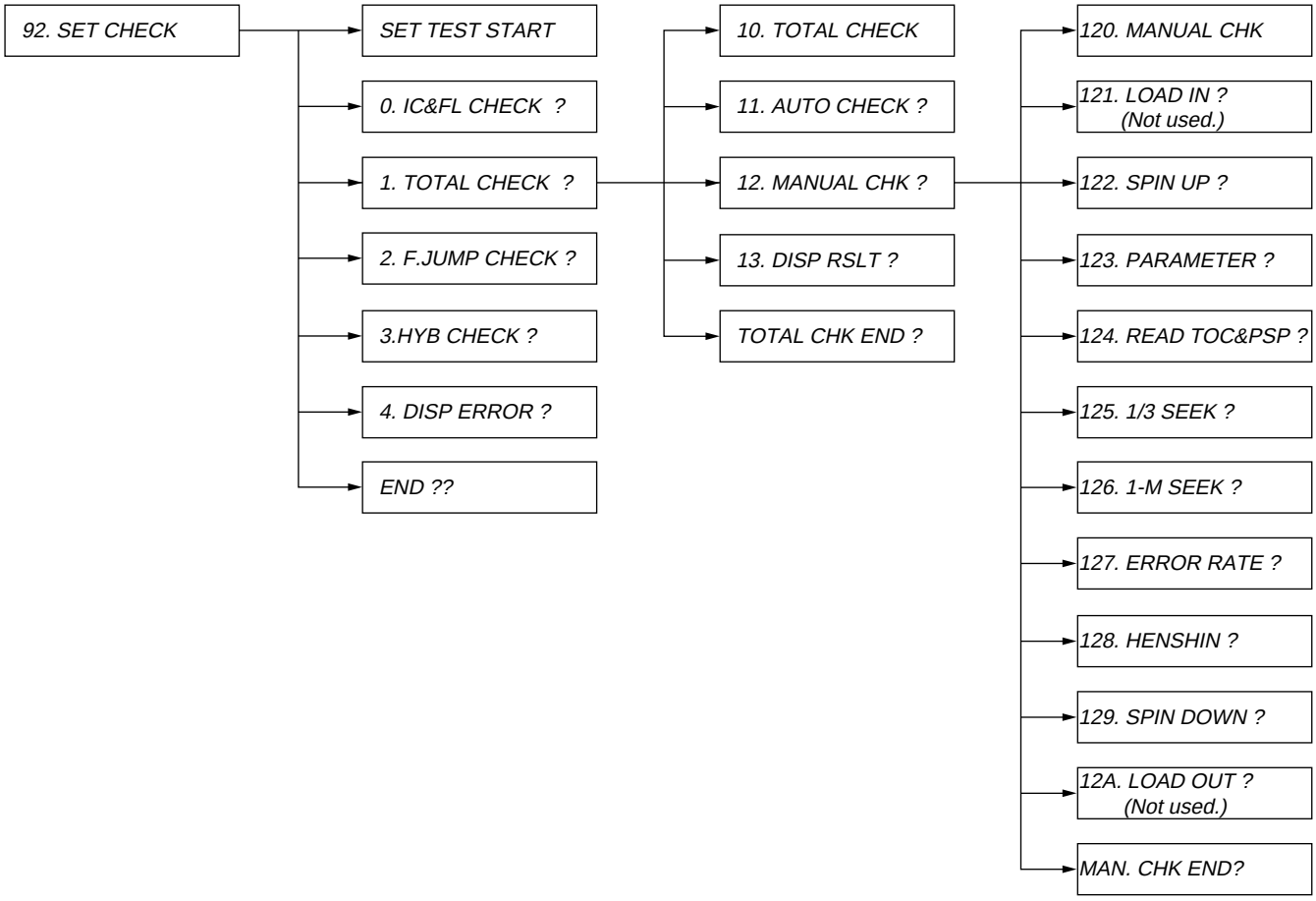

Press the [⏮AMS⏭] dial when No.□□□□□ □□□□□*1 is displayed, and a checking for that display will start or the lower layer will be selected. For the selection on the same layer, rotate the [⏮ AMS ⏭] dial. It is looped on the same layer, and when “END?” is displayed, press the [⏮ AMS ⏭] dial to return to the upper layer.
*1 □ denotes a displayed character.

Manual Check Method

In the “12. MANUAL CHK”, individual checks (121. LOAD IN to 12A. LOAD OUT) are possible.

Example: If 124. READ TOC of 12. MANUAL CHECK is to be checked.

Setting Method:

1. After setting the test mode, rotate the [⏮ AMS ⏭] dial to select “92. SET CHECK” and press the [⏮ AMS ⏭] dial to enter.
2. When “SET TEST START” is displayed, rotate the [⏮ AMS ⏭] dial clockwise by 2 clicks to select “1. TOTAL CHECK?” and press the [⏮ AMS ⏭] dial to enter.
3. When “10. TOTAL CHECK” is displayed, rotate the [⏮AMS⏭] dial clockwise by 2 clicks to select “12. MANUAL CHK?" and press the [⏮ AMS ⏭] dial to enter.
4. When “120. MANUAL CHK” is displayed, rotate the [⏮AMS⏭] dial clockwise by 4 clicks to select “124. READ TOC&PSP?” and press the [⏮ AMS ⏭] dial to enter.
5. A checking will start automatically.

Note: In making a check, the disc must be loaded. Immediately when a check started, the tray is drawn into the set. Also, the tray can be opened/closed even during the set check mode.

4-1. IC AND FLUORESCENT DISPLAY TUBE CHECK (SELF-DIAGNOSIS)

The communication between microcomputer and main ICs (self-diagnosis) and the fluorescent display tube all lit are checked.

Checking Method:

1. After setting the test mode, rotate the [⏮ AMS ⏭] dial to select "92. SET CHECK" and press the [⏮ AMS ⏭] dial to enter.
2. When "SET TEST START" is displayed, rotate the [⏮AMS⏭] dial clockwise by 1 click to select "0. IC&FL CHECK?" and press the [⏮ AMS ⏭] dial to enter.
3. A checking will start automatically, and "0. IC&FL CHECK" will be displayed. (Checking time is about 3 seconds)
4. After IC communication check, all segments of fluorescent display tube will be lit. At this time, check visually for a skipped character.
5. At successful completion of check, "0. IC CHECK OK" is displayed. In this case, no error exists in the IC interface. Proceed to 4-2. AUTO CHECK.

Note: The check mentioned above tests the communication from microcomputer to main ICs. Even if the check successfully finished, the IC to be checked is not always normal. Consider it for reference only.

6. In case of an IC communication error, the following display will be given during the checking. Possible causes of error are as listed below.

Error display	Causes (typical example)
DVD DEC. ERROR	1. IC701 (SACD decoder) is faulty 2. IC701 pin ⑯⑧(XRST) does not go "H" • IC901 pin ㊹ (XDIS) does not go "H" • IC902 (expander) is faulty 3. 768fs (33.86688 MHz) is not present to IC701 pin ⑯⑦(XTAL) • IC811 (3-multiplying circuit) is faulty • Clock signal 256fs is not sent from AUDIO board (CN902 pin ④) • CN902 pin ①,⑤ (DFGND) and pin ③ (3.3V-D) are open or shorted • CN902 and FFC connection is loose, or FFC is disconnected
DVD DRAM ERR	1. IC706 (D-RAM) is faulty 2. IC701 pin ⑯⑧(XRST) does not go "H" • IC901 pin ㊹ (XDIS) does not go "H" • IC902 (expander) is faulty 3. Faulty communication line between IC701 and IC706 • Data line, address line, WE, etc. 4. D903 (1SS367) is faulty
CD DSP ERROR	1. IC509 (CD DSP) is faulty 2. 768fs (33.86688 MHz) is not present to IC509 pin ⑦① (XTAL) Same as cause 3 of DVD DEC. ERROR 3. IC509 pin ② (XRST) does not go "H" • IC901 pin ㊹ (XDIS) does not go "H" • IC902 (expander) is faulty
EEPROM ERROR	1. IC903 (EEPROM) is faulty
PRAWN DRAM ERR *1	1. IC808 (D-RAM) is faulty 2. IC801 (DSD decoder) is faulty 3. 768fs (33.86688 MHz) is not present to IC801 pin ⑪ (MCKI) Same as cause 3 of DVD DEC. ERROR 4. IC801 pin ⑨ (XRST) does not go "H" • IC901 pin ㊹ (XDIS) does not go "H" • IC902 (expander) is faulty 5. Faulty communication line between IC801 and IC808 • Data line, address line, WE, etc. 6. D904 (1SS367) is faulty D+3.3V is not present to IC808
RF AMP ERROR	1. IC001 (RF AMP) is faulty 2. Loose connection between CN503 on MAIN board and CN001 on RF board, or FFC disconnection CN503 pin ⑲ (CLK RF), pin ⑳ (DATA RF) and pin ㉑ (SDEN) must be checked

*1 DSD decoder is also checked.

Causes Common to Each IC:

1. Faulty communication line between microcomputer and each IC.
   Disconnected patterns, floating series resistors, bridge, etc.
2. Faulty IC supply voltage.
   Particularly, check D+3.3V voltage. (D+5V for display microcomputer)
3. Faulty microcomputer communication port to each IC

Note: In case of more than two errors, the error display is switched over one after another, thus making the reading difficult.
In such a case, press again the [⏮ AMS ⏭] dial to make a recheck for error reading.

4-2. AUTO CHECK (AUTOMATIC VARIOUS MEASUREMENTS)

The auto check is performed to check if the set operates stably. Though a checking is made automatically, whether the measured data are within the specification is evaluated by the service person. The auto check results in NG immediately, if the check itself causes an error.

Setting Method of Auto Check Mode:

1. After setting the test mode, rotate the [⏮ AMS ⏭] dial to select "92. SET CHECK" and press the [⏮ AMS ⏭] dial to enter.
2. When "SET TEST START" is displayed, rotate the [⏮ AMS ⏭] dial clockwise by 2 clicks to select "1. TOTAL CHECK?" and press the [⏮ AMS ⏭] dial to enter.
3. When "10. TOTAL CHECK" is displayed, rotate the [⏮ AMS ⏭] dial clockwise by 1 click to select "11. AUTO CHECK?".

CD and SACD (SL) Disc Operation Check

Checking method:

1. Press the [OPEN/CLOSE] button to open the tray and place the test disc *1. The [OPEN/CLOSE] key is disabled immediately after the machine enters the TEST mode. Be sure to initialize the table.
2. Press the [⏮ AMS ⏭] dial, and the following check will be performed automatically.
3. Finally, the test disc will be ejected and the auto check will finish.
4. "AUTO CHECK OK" will be displayed at successful completion of auto check.
5. Recheck is enabled if the [⏮ AMS ⏭] dial is pressed in step 4. (Also, use this operation when exchanging the test disc)
6. In case of an error during the checking, the check is interrupted automatically and the error is displayed. (Error display example: "DISC DETECT ERROR") After error display, "CONT?STOP (J/S)" is displayed. In this case, if the [⏮ AMS ⏭] dial is pressed, the check where the error occurred is skipped and you can proceed to the next check. Also, if the [■] button is pressed, the check finishes and "AUTO CHECK NG" is displayed when even one NG item exists.

*1 Use PATD-012 or YEDS-18 for CD, and SATD-S5 or SATD-S4 for SACD (SL). Using another disc will result in a checking failure.

Check Items:

Items	Description	Remarks
LOAD IN TIME (msec)	Time until a disc is chucked from the state where loading tray is out	Loading in switch H→L
SPIN UP TIME (msec)	Time from spindle kick to PLL lock	Lock signal L→H
RF/VC/FE/TE (ORG)	Offset values before RF (PI), VC, FE, TE signal offset adjustment RF (8 bit data in hex notation) VC, FE, TE (9 bit data in hex notation)	At offset 0 RF: A0h VC, FE, TE: 00h
RF/VC/FE/TE (ADJ)	Offset values after RF (PI), VC, FE, TE signal offset adjustment (Less than ORG value if offset correction is normal) RF (8 bit data in hex notation) VC, FE, TE (9 bit data in hex notation)	VC offset is not adjusted (Measurement only) Also, for SACD, the TE offset is not measured and adjusted
PI/TRVS PP (ORG/ADJ)	PI (ORG): PI value at disc type check (decimal data) PI (ADJ): PI value after PI offset adjustment (read value at microcomputer A/D) (decimal data) TRVS PP (ORG): Traverse level before level correction (AGC) (decimal data) TRVS PP (ADJ): Traverse level after level correction (AGC) (decimal data)	PI level conversion Read value × 12.9mV Traverse level conversion Read value × 12.9mV 12.9mV=3.3V ÷ 256 (8 bit)
PIOR/CCR/TRCR	PIOR: Set value of PI offset coarse adjusting register CCR: Set value of FE offset coarse adjusting register TRCR: Set value of TE offset coarse adjusting register	Registers in RF amplifier
FOCUS/TRK GAIN	Auto gain adjusted values of focus and tracking servos (8 bit data in hex notation)	Reference: 30h
FBIAS/TRVSC/TRCR2/CFR	FBIAS: Focus bias set value (9 bit data in hex notation) TRVSC: Traverse center value (9 bit data in hex notation) TRCR2: Set value of E-F balance coarse adjusting register CFR: Set value of traverse level adjusting register	TRCR2 adjusts the E-F gain balance and used for CD only (Fixed to 06 for SACD) TRCR2 and CFR are registers in RF amplifier
MIN JITTER AT F.BIAS	Minimum jitter value in focus bias adjustment (CD only)	Correlative with RF jitter
READ TOC TIME (msec)	Time required for TOC reading	
PSP AMPLITUDE		SACD only
1/3 SEEK TIME F) AVE/MIN/MAX (msec): R) AVE/MIN/MAX (msec):	Seek time between 1/3LBA and 2/3LBA of the disc 1/3LBA→2/3LBA average/minimum/maximum 2/3LBA→1/3LBA average/minimum/maximum	LBA: Absolute address
1/MAX SEEK TIME F) AVE/MIN/MAX (msec): R) AVE/MIN/MAX (msec):	Seek time between most inward track (0LBA) and most outward track max LBA most inward→most outward average/minimum/maximum most outwar→most inward average/minimum/maximum	
ERROR RATE	Error rate measurement For CD: Average value/Maximum value of C1 and C2 For SACD: Average value/Maximum value of PO, PI1 and PI2	Measure for 10 sec at track No.5 For the SACD, 160 block data except the data under tracking jump

Items	Description	Remarks
HENSIN	Eccentricity measurement Eccentricity (actual eccentric amount) of disc, disc pulley total	For the CD only are measured • Read by dividing by 10 • 0 may be displayed if eccentricity is small (10um or less) (Due to measurement reason)
SPIN DOWN TIME (msec)	Time from spindle brake application to rotation stop	FG (IC901 pin ⑥②) monitoring
FG LEVEL [STEP]	FG value of dics inner position	
LOAD OUT TIME (msec)	Time until loading table comes out from the state where a disc is in chuck	Loading out switch H→L

Measured Data Reading Method:

To judge the check result, the measured data must be read.

1. When "AUTO CHECK OK" is displayed, rotate the [⏮ AMS ⏭] dial clockwise by 2 clicks.
2. When "13. DISP RSLT?" is displayed, press the [⏮ AMS ⏭] dial to enter.
3. "PLEASE WAIT" will be displayed and in several seconds, "13. DISP RESULT" will be displayed.
4. Rotate the [⏮ AMS ⏭] dial clockwise by 1 click, and the "LOAD IN" will be displayed.
5. Press the [⏮ AMS ⏭] dial to enter. The LOAD IN TIME measured value will be displayed.
6. Compare the displayed value with the following specified value.
7. Hence, repeat step 4 to 6 (display is variable) and read the measured data respectively.
8. Compare the measured data with the specified value to check for NG item.

Note: Blank display of measured value means that an error occurred during the checking or no measurement was taken place.

Specified Value:

(1) SACD (Use the test disc SATD-S5 or SATD-S4)

Note: Measured values in check items are typical ones.

Check items		Specified value	
LOAD IN TIME (msec)	:	3000 msec or less	
SPIN UP TIME (msec)	: 1652	3000 msec or less	
RF/VC/FE/TE AVRG (ORG)	: 98, C, 1DE, 0	RF: 7E-9E, VC: 1F1-10, FE: 1B8-42, TE: 1BB-5C	
RF/VC/FE/TE AVRG (ADJ)	: 9F, C, 4, 0	RF: 98-A5, VC : 1F1-10, FE: 1F1-10, TE: 1F1-10	
PI/TRVS PP (ORG/ADJ)	: 81, 131, 78, 105	PI ORG: 70-89, PI ADJ: 122-135, TRVS ORG: 68-114, TRVS ADJ: 55-100	
PIOR/CCR/TRCR	: 1A, 31, 1F	No specified value given	
FOCUS/TRK GAIN	: 2E, 24	FOCUS: 10-40, TRK: 10-40	
FBIAS/TRVSC/TRCR2/CFR	: 2,13, 6, 60	F.BIAS: 1D0-4F, TRVSC: 1D0-30 TRCR2, CFR: no specified value given	
READ TOC TIME (msec)	: 1283	2200 msec or less	
PSP AMPLITUDE	: 1666	1300 or above	
1/3 SEEK TIME F) AVE/MIN/MAX (msec) R) AVE/MIN/MAX (msec)	 : 967, 928, 990 : 974, 933, 993	 AVE: 1100 msec or less, MAX: 1300 msec or less AVE: 1100 msec or less, MAX: 1300 msec or less	* Items are not used in the SATD-S5.
1/MAX SEEK TIME F) AVE/MIN/MAX (msec) R) AVE/MIN/MAX (msec)	 : 1958, 1938, 1968 : 1915, 1909, 1935	 AVE: 2200 msec or less, MAX: 2500 msec or less AVE: 2200 msec or less, MAX: 2500 msec or less	
ERROR RATE PO MAX/AVE FRAME PO MAX/AVE NUM PI1 MAX/AVE FRAME PI1 MAX/AVE NUM PI2 MAX/AVE FRAME PI2 MAX/AVE NUM	 : 0, 0 : 160, 3 : 0, 0 : 242, 17 : 0, 0 : 128, 2	 No specified value given MAX: 1000 or less, AVE: 100 or less No specified value given MAX: 1000 or less, AVE: 100 or less No specified value given MAX: 1000 or less, AVE: 100 or less	
SPIN DOWN TIME (msec)	: 1342	2500 msec or less	
FG LEVEL [STEP]	: 82	100 or less	
LOAD OUT TIME (msec)	:	3000 msec or less	

(2) CD (Use the test disc PATD-012 or YEDS-18)

Note: Measured values in check items are typical ones.

Check items		Specified value
LOAD IN TIME (msec)	:	3000 msec or less
SPIN UP TIME (msec)	: 1372	2500 msec or less
RF/VC/FE/TE AVRG (ORG)	: 98, C, 1D6, 4	RF: 7E-9B, VC: 1F1-10, FE: 1B8-42, TE: 1BB-5C
RF/VC/FE/TE AVRG (ADJ)	: 9F, A, 1FF, 4	RF: 98-A5, VC: 1F1-10, FE: 1F1-10, TE: 1F1-10
PI/TRVS PP(ORG/ADJ)	: 81, 131, 95, 92	PI ORG: 70-89, PI ADJ: 122-135, TRVS ORG: 70-120, TRVS-ADJ: 70-120
PIOR/CCR/TRCR	: 1A, 11, 1F	No specified value given
FOCUS/TRK GAIN	: 2E, 2D	FOCUS: 20-40, TRK: 20-40
FBIAS/TRVSC/TRCR2/CFR	: 0, 10, 5, A0	F.BIAS: 1E0-30, TRVSC: 1F0-10 TRCR2, CFR: no specified value given
MIN JITTER AT F.BIAS	: 94	100 or less
READ TOC TIME (msec)	: 1410	2500 msec or less
1/3 SEEK TIME F) AVE/MIN/MAX (msec) R) AVE/MIN/MAX (msec)	 : 824, 804, 850 : 850, 833, 860	 AVE: 1000 msec or less, MAX: 1200 msec or less AVE: 1000 msec or less, MAX: 1200 msec or less
1/MAX SEEK TIME F) AVE/MIN/MAX (msec) R) AVE/MIN/MAX (msec)	 : 2086, 1999, 2151 : 1805, 1793, 1835	 AVE: 2300 msec or less, MAX: 2500 msec or less AVE: 2300 msec or less, MAX: 2500 msec or less
ERROR RATE C1 MAX/AVE C2 MAX/AVE	 : 3, 0 : 0, 0	 C1 MAX: 15 or less C2 MAX: 0
HENSHIN RYOU (1/10um)	: 89	800 or less (100 um or less)
SPIN DOWN TIME (msec)	: 1272	2000 msec or less
FG LEVEL [STEP]	: 82	100 or less
LOAD OUT TIME (msec)	:	3000 msec or less

Note: RF, VC, FE, TE, FBIAS and TRVSC measured values are hexadecimal data with positive and negative signs. When comparing the measured value with the specified value, refer to the following.

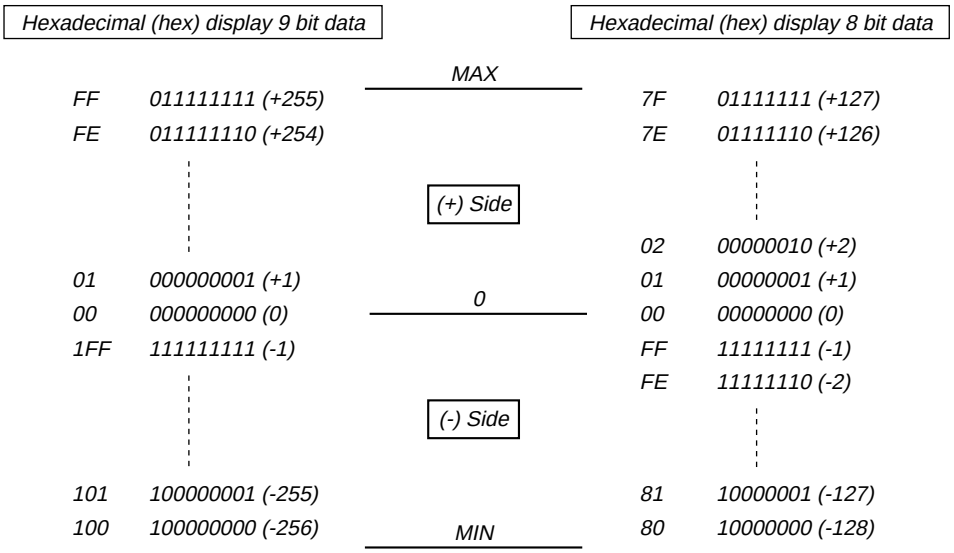

4-3. SACD (DL) DISC OPERATION CHECK

(• Perform as necessary)

The stability of the set can be checked by repeating the combined operation of focus jump (layer 0→1, layer 1→0) and access to the most inward track←→most outward track by the set number of times or until an error occurs using the dual layer HD disc, DL disc.

A set of operation including an access to the layer 0 (most inward track)→layer 0 (most outward track)→focus jump (layer 0→1)→layer 1 (most outward track)→layer 1 (most inward track)→focus jump (layer 1→0) is carried out repeatedly by the set number of times.

Checking Method:

1. After setting the test mode, rotate the [⏮ AMS ⏭] dial to select "92. SET CHECK" and press the [⏮ AMS ⏭] dial to enter.
2. When "SET TEST START" is displayed, rotate the [⏮ AMS ⏭] dial clockwise by 3 clicks to display "2. F.JMP CHECK?".
3. Press the [OPEN/CLOSE] button to open the tray, and place the DL disc.
4. Press the [⏮ AMS ⏭] dial to load the tray into the set.
5. "NOW SET UP" will be displayed and the DL disc setup will start. (It takes about ten and several seconds to set up the disc as two layers of layer 0 and layer 1 are adjusted)
6. At the completion of setup, "F.JUMP TIMES" will be displayed.
7. Rotate the [⏮AMS⏭] dial clockwise by 5 clicks to display "5". (If 5 sets of operation is executed *1)
8. Press the [⏮ AMS ⏭] dial, and the check will start.
9. Immediately when the check finished, "UP MAX □□□□"→"UP AVE □□□□"→"DW MAX □□□□"→"DW AVE □□□□"→"F.JMP OK [TIMES]" will be displayed repeatedly. (□ denotes the measured value in msec)
   - UP MAX: Max time required for layer 0 (most inward track)→layer 0 (most outward track)→focus jump (layer 0→1)
   - UP AVE: Average time required for layer 0 (most inward track)→layer 0 (most outward track)→focus jump (layer 0→1)
   - DW MAX: Max time required for layer 1 (most outward track)→layer 1 (most inward track)→focus jump (layer 1→0)
   - DW AVE: Average time required for layer 1 (most outward track)→layer 1 (most inward track)→focus jump (layer 1→0)

   Specified value: 7000 msec or less (if no error occurred)
   If an error occurred due to defocusing during the checking, refer to the following error list. (24 page)
10. Press the [OPEN/CLOSE] button, and the disc will be ejected and the check will finish. Also, if the [⏮ AMS ⏭] dial is pressed in step 9, "2. F.JUMP CHK OK" will be displayed. Then, if the [⏮ AMS ⏭] dial is again pressed, "2. F.JMP CHECK" will be displayed instantaneously and a recheck is enabled from the step 5 in the same manner.

*1 Setting arbitrary number of times instead of 5 allows the checking to be repeated by the set number of times. Also, setting 0 (zero) allows the aging check to be repeated until an error occurs.

4-4. HYBRID DISC OPERATION CHECK

(• Perform as necessary)

This test checks the auto adjustment time required when the disc is switched between HD (SACD) layer and CD layer. This test is conducted to check the stability in switching from CD to SACD, or SACD to CD in the HYBRID disc.

A set of operation including CD layer stop state→HD layer auto adjustment→HD layer TOC reading→HD layer stop state→CD layer auto adjustment→CD layer TOC reading→CD layer stop state is repeated by the set number of times.

Checking Method:

1. After setting the test mode, rotate the [⏮ AMS ⏭] dial to select "92. SET CHECK" and press the [⏮ AMS ⏭] dial to enter.
2. When "SET TEST START" is displayed, rotate the [⏮ AMS ⏭] dial clockwise by 4 clicks to display "3. HYB CHECK?".
3. Press the [OPEN/CLOSE] button to open the tray, and place the HYBRID disc.
4. Press the [⏮ AMS ⏭] dial to load the tray into the set.
5. "NOW SET UP" will be displayed and the HYBRID disc setup will start. (It takes about several seconds to set up the disc *1)
6. At the completion of setup, "CHANGE TIMES?" will be displayed.
7. Rotate the [⏮AMS⏭] dial clockwise by 5 clicks to display "5" (if 5 sets of operation is executed *2)
8. Press the [⏮AMS⏭] dial, and "START" will be displayed and the check will start. During the check, the following will be displayed.
   - "CD—>HD" display: Time from switching from CD layer to HD layer up to start of play is measured.
   - "HD—>CD" display: Time from switching from HD layer to CD layer up to start of play is measured.
9. Immediately when the check finished, "CD MAX □□□□"→"CD AVE □□□□"→"HD MAX □□□□"→"HD AVE □□□□" will be displayed repeatedly. (□ denotes the measured value in msec)
   Specified value: 10000 msec or less (if no error occurred)
   If an error occurred due to defocusing during the checking, refer to the following error list. (24 page)
10. Press the [OPEN/CLOSE] button, and the disc will be ejected and the check will finish. Also, if the [⏮ AMS ⏭] dial is pressed in step 9, "HYB CHK OK" will be displayed. Then, if the [⏮AMS⏭] dial is again pressed, "HYBRID CHECK" will be displayed instantaneously and a recheck is enabled from the step 5 in the same manner.

*1 "NOW SET UP" display may continue for several minutes and an error may be displayed depending on the discs. In this case, press the [⏮ AMS ⏭] dial again.

*2 Setting arbitrary number of times instead of 5 allows the checking to be repeated by the set number of times. Also, setting 0 (zero) allows the aging check to be repeated until an error occurs.

4-5 . AGING MODE

(• Perform as necessary)

4-5-1. The aging can be performed to the set in the test mode

The aging can be continued by the set number of times or until an error occurs.
In the aging, the following operations are repeated.
Table turn→Disc chucking→Disc detect→Servo on→Auto adjustment→TOC reading→Play of first track for 5 second→Play of last track for 5 second→Play of first track for 5 second→Disc unchucking

Setting Method:

1. After setting the test mode, rotate the [⏮ AMS ⏭] dial to select "94. SET AGING" and press the [⏮ AMS ⏭] dial to enter.
2. When "AGING TIMES" is displayed, rotate the [⏮AMS⏭] dial to set the number of aging times. (For the number of times, every 10 times can be set. Setting 0 (zero) eliminates the count limitation where the aging is repeated until an error occurs)
   Note: Do not perform unmanned overnight aging..
3. Press the [⏮ AMS ⏭] dial, and "AGING START" will be displayed instantaneously, then "DISC IN & JOG ON" will be displayed and the tray will come out automatically.
4. Place a disc (CD or the SACD SL disc) on the tray. In the case of this set, the multiple discs can be placed. Even when the discs (CD or the SACD SL disc) of different types are mixed, the aging test can be performed. Use the [MULTI/2CH] key when placing a disc. When discs are placed in positions, press the [⏮ AMS ⏭] dial.
5. The aging test starts.
6. At the completion of aging by the set number of times, the tray will come out automatically and the check will stop.
   Typical time required for aging About 1 hour/100 times
   "AGING SUCCESS!" will be displayed if no error occurred in the aging, or the error will be displayed if an error occurred. (Refer to the following error list)

4-6. SHIPPING MODE

The repaired set must be initialized, and for this purpose the set should be set to the shipping mode.

Setting Method:

1. After setting the test mode, rotate the [⏮ AMS ⏭] dial to select "8d Set Up Init" and press the [⏮ AMS ⏭] dial to enter.
2. "8D 000000000 00" will be displayed, and if the scroll starts in the left direction, the set initialization has completed
3. Press the [POWER] button to turn the power off.

Note: Take care not to leave the test disc in the set.

The following setups are established in the SHIPPING MODE

Initialization of EEPROM (IC903)

• PLAY MODE	CONTINUE
• M/2CH SELECT	MULTI
• DIGITAL FILTER	STD
• 2ch SPK MODE	2ch DIRECT
• Mch SPK MODE	Mch DIRECT

• Resetting the accumulated hours meter.

Error List

An error occurring during the check in the aging mode of the test mode is displayed automatically (scroll display) immediately when the error occurred.

< How to view the error history >

1. Select "95 DISP ERROR" with the [⏮ AMS ⏭] key, and press the [⏮ AMS ⏭] key once.
2. The error that has occurred lastly in the set and the signal status (H = 1, L = 0) at that time are displayed on the FL display by scrolling. (Types of the errors and the signal status that can be checked, are the same as the error display of the aging mode.)
3. Press the [⏮ AMS ⏭] key once again to show the error history repeatedly.
4. When the error history is displayed with scrolling once, the mode returns to the normal test mode.

Error display is as follows.
Error name, Disc type, IN SW (Sled in switch state), FOK (FOK signal state), LOCK (LOCK signal state), From (Displayed if effective), To (Displayed if effective), Aging times (Displayed in aging mode only)
Display example
ACCESS MOVE ERROR : SACDSL : IN SW 1 FOK 0 LOCK 0 : FROM 205663 : TO 2461601 : TIMES 5
(Error name) (Disc type) (Sled in switch, FOK, LOCK signal state) (Relative address) (Relative address)(Aging times)

Display Items List:

Display items	Description	Remarks
Error name	→Refer to the error display list	
IN SW	Sled in switch state when an error occurred 0: switch off Not limit in 1: switch on Limit in (Optical pick-up is at most inward track)	
FOK	FOK signal state when an error occurred FOK signal Is focus on? 0: FOK L (Focus off), 1: FOK H (Focus on)	
LOCK	LOCK signal state when an error occurred. LOCK signal Is PLL lock? 0: LOCK L Not lock, 1: LOCK H Lock	
From	Displayed if effective in the error item →Refer to the error display list	Disc PSN (relative address) is displayed in case of access error
To	Displayed if effective in the error item →Refer to the error display list	Disc PSN (relative address) is displayed in case of access error

Error Display List:

Error display	Error description	Main causes of errors
DISC DETECT ERROR	Disc type error MIRR measured time is displayed in From:	Optical pick-up, RF amplifier or CD DSP IC is faulty
OFFSET ADJUST ERROR	Offset adjustment error	Optical pick-up, RF amplifier or CD DSP IC is faulty
FCS SRV ON ERROR	Focus servo error An error code is displayed in From:	From:1 means focus search failed From:2 means defocusing
CLV SRV ON ERROR	CLV servo error	Defocusing
E-F BALANCE ERROR	E-F balance adjustment error	Defocusing
TRK SRV ON ERROR	Tracking servo error	Tracking servo on time out Optical pick-up, RF amplifier or CD DSP IC is faulty
SLD SRV ON ERROR	Sled servo error	Sled servo on time out
FOCUS BIAS ERROR	Focus bias adjustment failed An error code is displayed in From:	Defocusing during adjustment Description of display An error code is displayed in From From:1 means retry failed 3 times From:2 means abnormal value Optical pick-up, RF amplifier or CD DSP IC is faulty
FCS AGC ERROR	Error at focus gain automatic adjustment	Defocusing during adjustment Optical pick-up, RF amplifier or CD DSP IC is faulty
TRK AGC ERROR	Error at tracking gain automatic adjustment	Defocusing during adjustment Optical pick-up, RF amplifier or CD DSP IC is faulty
ACCESS 1TJ ERROR	Access Error at one-track jump Effective addresses (PSN) are displayed in From: and To:	Access failed Defocusing at access, etc
ACCESS FINE ERROR	Access Error at fine search Effective addresses (PSN) are displayed in From: and To:	Access failed Defocusing at access, etc
ACCESS MOVE ERROR	Access Error at M-track MOVE Effective addresses (PSN) are displayed in From: and To:	Access failed Defocusing at access, etc
WHILE PLAYING ERROR	Error during disc playing	Defocusing Focusing retry failed
FCS JUMP ERROR	Time out error at focus jump	Defocusing Focusing retry failed

System errors are as follows.
Note: This error is not saved in the set.

Display	Description
Toc Error *	Error during the time from auto adjustment to TOC reading, Different type of disc (Such as a DVD disc), Disc is dirty
Toc Error ****	Illegal SACD (Such as a pirated version)
Read Error	Music data read error (Error during disc playing)

4-7. WAVEFORMS CHECK

This set performs automatic adjustment for each disc, and therefore the set need not be adjusted when parts are replaced, but it requires checking following the description in this section, 4-1. IC AND FLUORESCENT DISPLAY TUBE CHECK and 4-2. AUTO CHECK.
For the check, the test mode is used. Wrong setting causes a trouble, thus requiring extreme care.

BU Electrical Adjustment Mode

The BU electrical adjustment mode is used to check the S curve waveform, traverse waveform and RF waveform. After a disc is placed on the tray, each time the [⏮ AMS ⏭] dial is pressed, the check mode is switched in order for S curve waveform→traverse waveform→RF waveform.

Setting Method:
After setting the test mode, rotate the [⏮AMS⏭] dial to select "9C BU DENCHO" and press the [⏮ AMS ⏭] dial to enter. "BU MEASURE" will be displayed if the BU electrical adjustment mode becomes active.

S Curve Check

Connection:

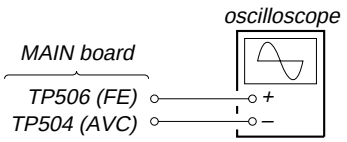

Checking Method:
1. After setting the BU electrical adjustment, place the test disc (PATD-012 or SATD-S5 or SATD-S4) on the tray and close the tray, then press the [⏮ AMS ⏭] dial.
2. At the completion of disc type check, "CD DETECT" will be displayed (for PATD-012 or YEDS-18).
   Note: For the SATD-S5 or SATD-S4, "SACD DETECT" is displayed.
3. Press again the [⏮AMS⏭] dial, and the S curve waveform check mode will become active and "S-J1 MODE" will be displayed.
4. Connect an oscilloscope to the TP506 (FE) and TP504 (AVC) on the MAIN board.
5. Check that the level Ⓐ and Ⓑ of waveform on the oscilloscope satisfy the specification.

Specified Value:

Disc	Ⓐ	Ⓑ
SATD-S5 or SATD-S4	0.7 to 1.7 Vp-p	- 0.1 to +0.1V
PATD-012 or YEDS-18		

S curve waveform

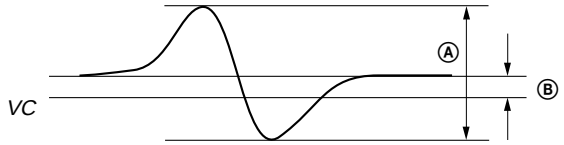

Note: For easier observation of this waveform, extend the sweep time and raise the brightness.

Checking and Connecting Location : See page 27.

Traverse Check

Connection:

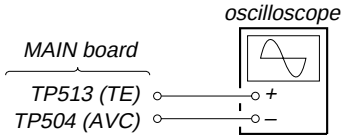

Checking Method:
1. Under the condition of S curve waveform check mode in step 5, press the [⏮ AMS ⏭] dial.
2. After "WAIT" is displayed, the traverse waveform check mode will become active and "TRAVERSE MODE" will be displayed.
3. Connect an oscilloscope to the TP513 (TE) and TP504 (AVC) on the MAIN board.
4. Check that the level Ⓐ and Ⓑ of waveform on the oscilloscope satisfy the specification.

Specified Value:

Disc	Ⓐ	Ⓑ
SATD-S5 or SATD-S4	0.9 to 1.5 Vp-p	- 0.1 to +0.1V
PATD-012 or YEDS-18		

Traverse waveform

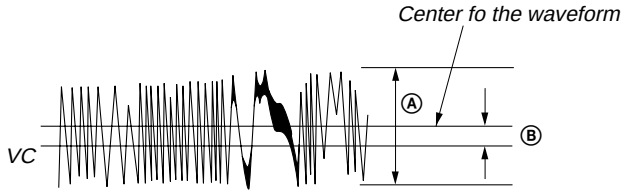

Checking and Connecting Location : See page 27.

RF Level Check

Connection:

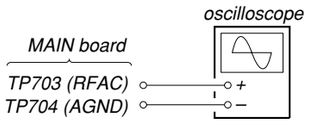

Checking Method:

1. Under the condition of traverse waveform check mode in step 4, press the [⏮ AMS ⏭] dial.
2. Connect an oscilloscope to the TP703 (RFAC) and TP704 (AGND) on the MAIN board.
3. After "WAIT" is displayed, the RF waveform check mode will become active and "PLAY 5th" will be displayed, and the 5th music on the disc will be played.
4. Check that the RF waveform is clear and the level satisfies the specification.
5. Press the [⏮AMS⏭] dial, and "GAISHU" will be displayed and the outward track of the disc will be played.
6. Check that the RF waveform is clear and the level satisfies the specification.
7. Press the [⏮AMS⏭] dial, and "NAISHU" will be displayed and the inward track of the disc will be played.
8. Check that the RF waveform is clear and the level satisfies the specification.
9. After checking, press the [⏮ AMS ⏭] dial, and the test is over when "BU MEASURE" is displayed.
10. Press the [OPEN/CLOSE] button to open the tray, and remove the test disc.
11. Using each type of disc, repeat from step 1 of S curve waveform check up to step 10 of RF level check.
12. When the check is over, press the [POWER] button to turn the power off.

Note: Take care not to leave the test disc in the set.

Specified Value:

Disc	Ⓐ
SATD-S5 or SATD-S4	0.9 to 1.5 Vp-p
PATD-012 or YEDS-18	

RF signal waveform

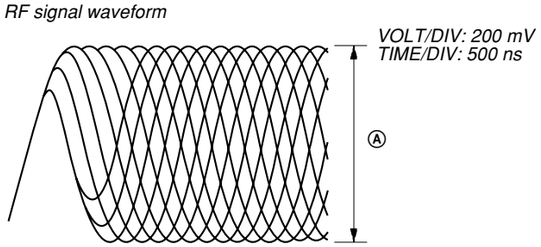

Note: Clear RF waveform refers to the waveform where ◊ shapes should be distinctively observed in the center.

CLV Jitter Check (CD only)

Connection:

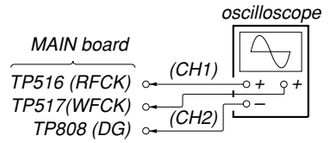

Checking Method:

1. Set the test mode.
2. Connect an oscilloscope to the TP516 (RFCK) (CH1), TP517 (WFCK) (CH2) and TP808 (DG) (GND) on the MAIN board.
3. Place the test disc PATD-012 or YEDS-18 on the tray, and close the tray.
4. Rotate the [⏮AMS⏭] dial to select "61 DISC DETECT", and press the [⏮AMS⏭] dial to enter. Then, the disc type will be judged.
5. Check that the disc type has been judged.
   (For the PATD-012, "DSKMOD CD" will be displayed. Refer to the test mode, DISC DETECT command (page 16))
6. Rotate the [⏮ AMS ⏭] dial to select "86 ALL SRV ON", and press the [⏮ AMS ⏭] dial. Then, the disc will rotate, automatic adjustment will be carried out, and all servos will be turned on.
7. Rotate the [⏮AMS⏭] dial to select "07 DSP MON3", and press the [⏮ AMS ⏭] dial to enter.
8. Check that the value Ⓐ of waveform on the oscilloscope satisfies the specification.
9. Rotate the [⏮AMS⏭] dial to select "19 ALL SRV OFF", and press the [⏮ AMS ⏭] dial. Then, all servos will be turned off and the disc rotation will stop.
10. Press the [OPEN/CLOSE] button to open the tray, and remove the test disc.
11. Press the [POWER] button to turn the power off.

Note: Take care not to leave the test disc in the set.

Specified Value:

Disc	Ⓐ
PATD-012 or YEDS-18	50 µsec or less

CLV jitter waveform

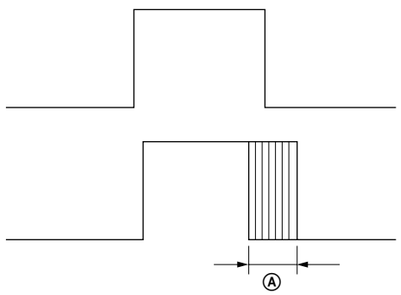

Checking and Connecting Location:

– MAIN Board (Component Side) –

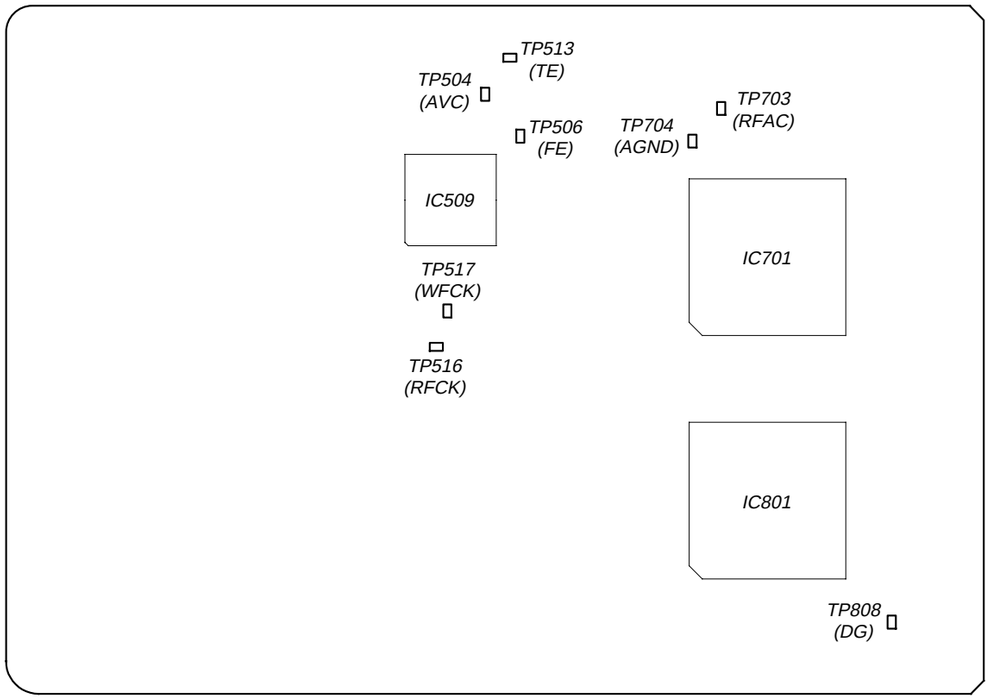

SECTION 5
DIAGRAMS

5-1. BLOCK DIAGRAM – RF/SERVO Section –

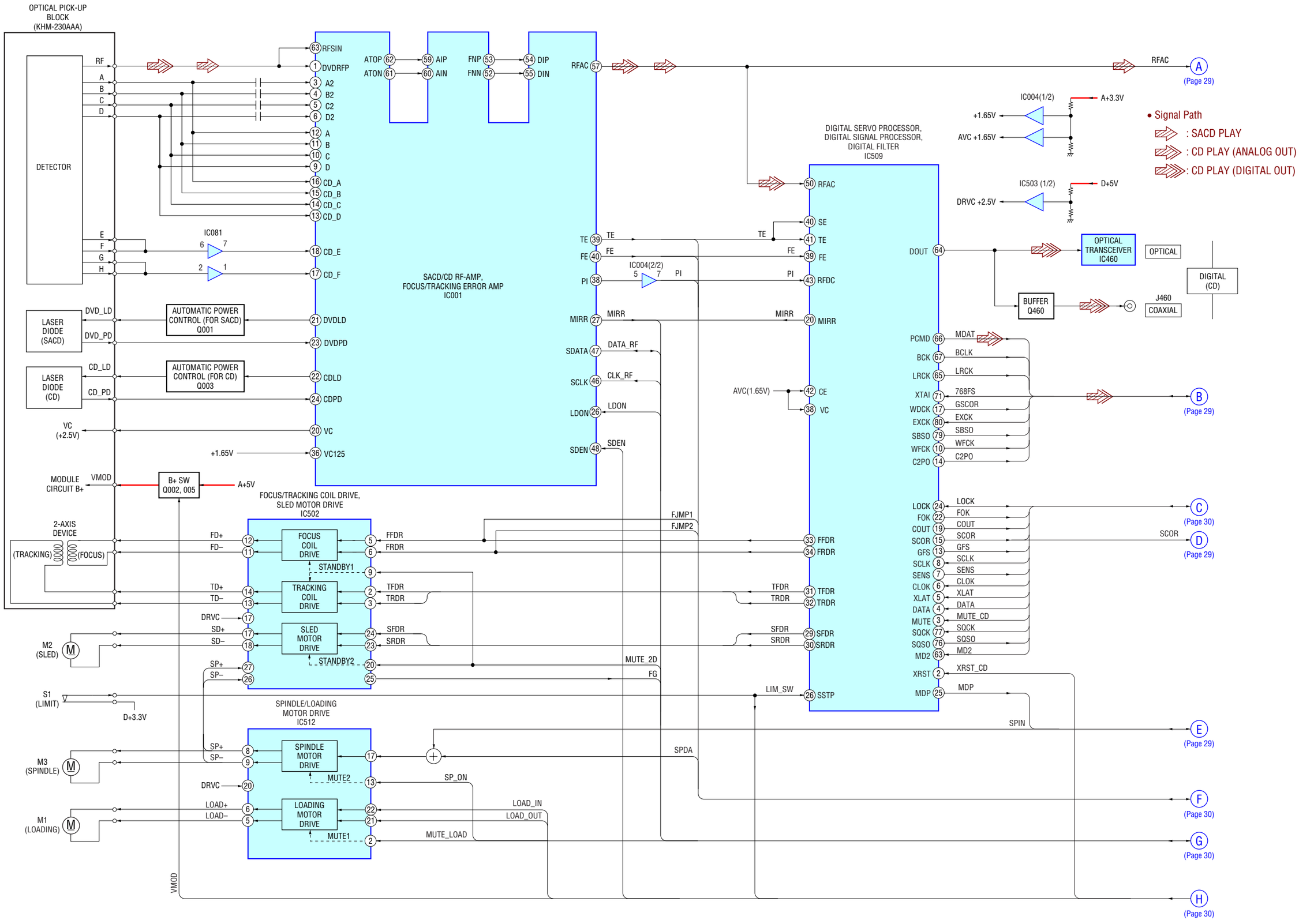

5-2. BLOCK DIAGRAM – MAIN Section (1/2) –

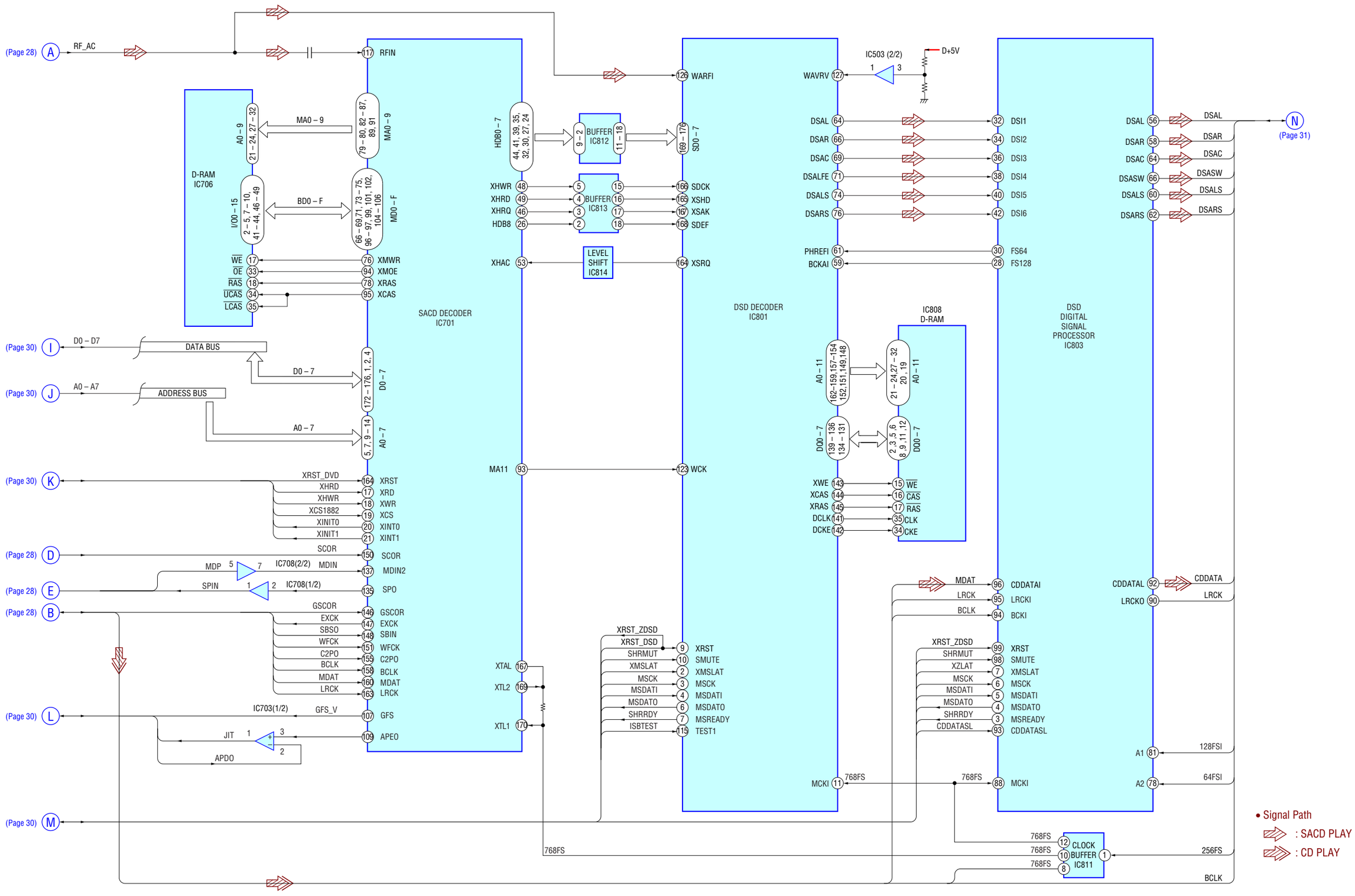

5-3. BLOCK DIAGRAM – MAIN Section (2/2) –

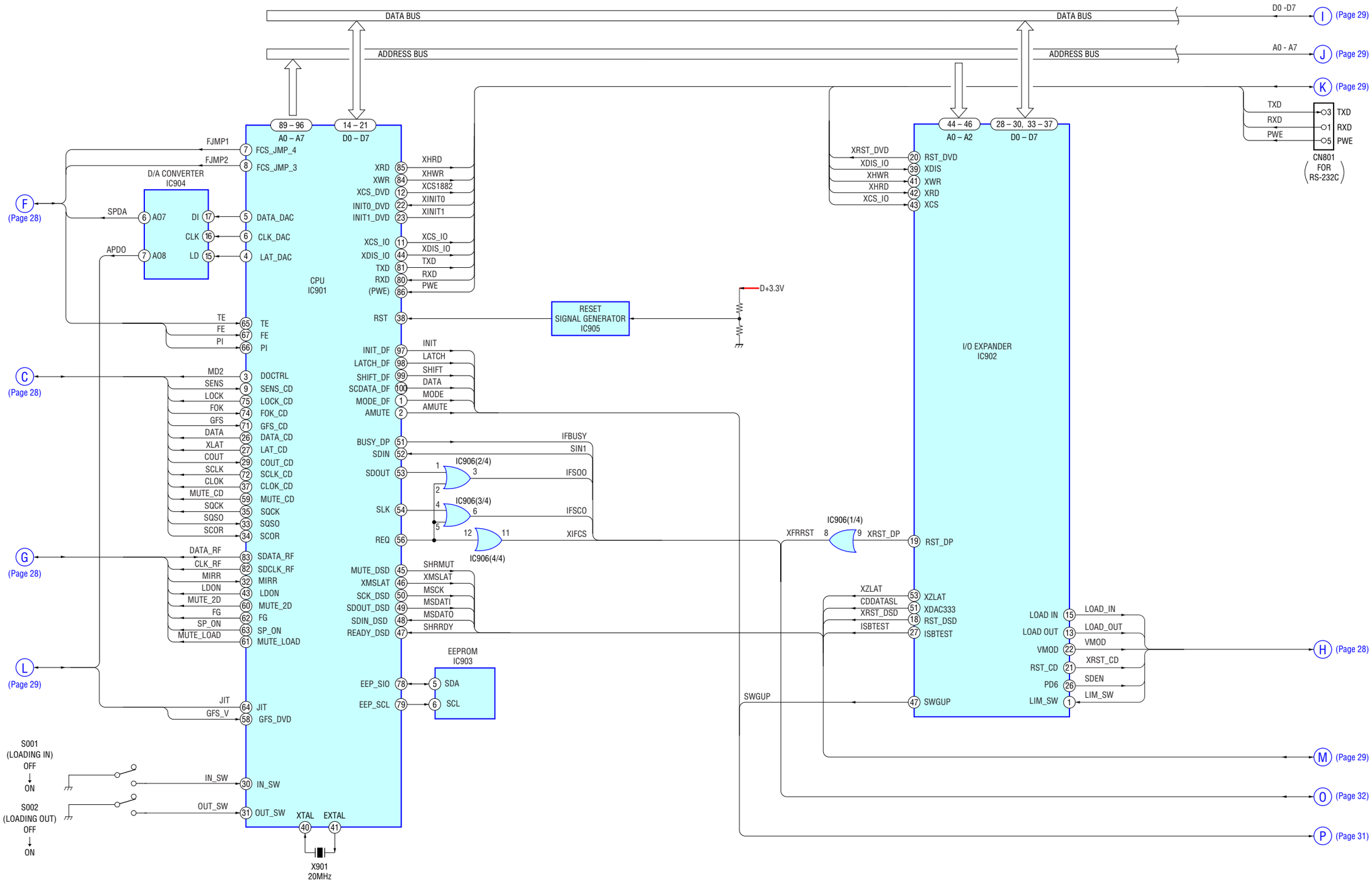

5-4. BLOCK DIAGRAM – AUDIO Section –

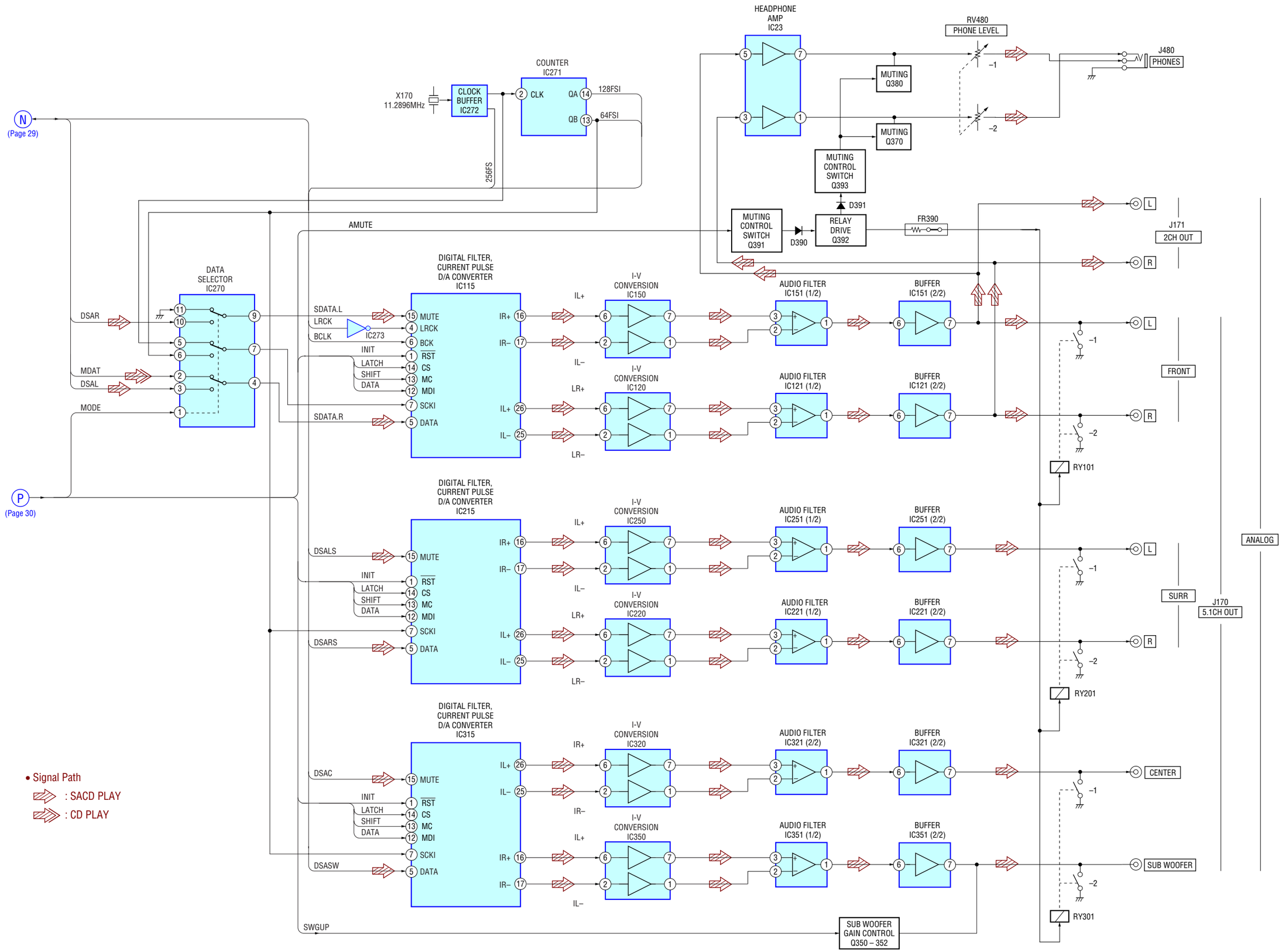

5-5. BLOCK DIAGRAM – DISPLAY/POWER SUPPLY Section –

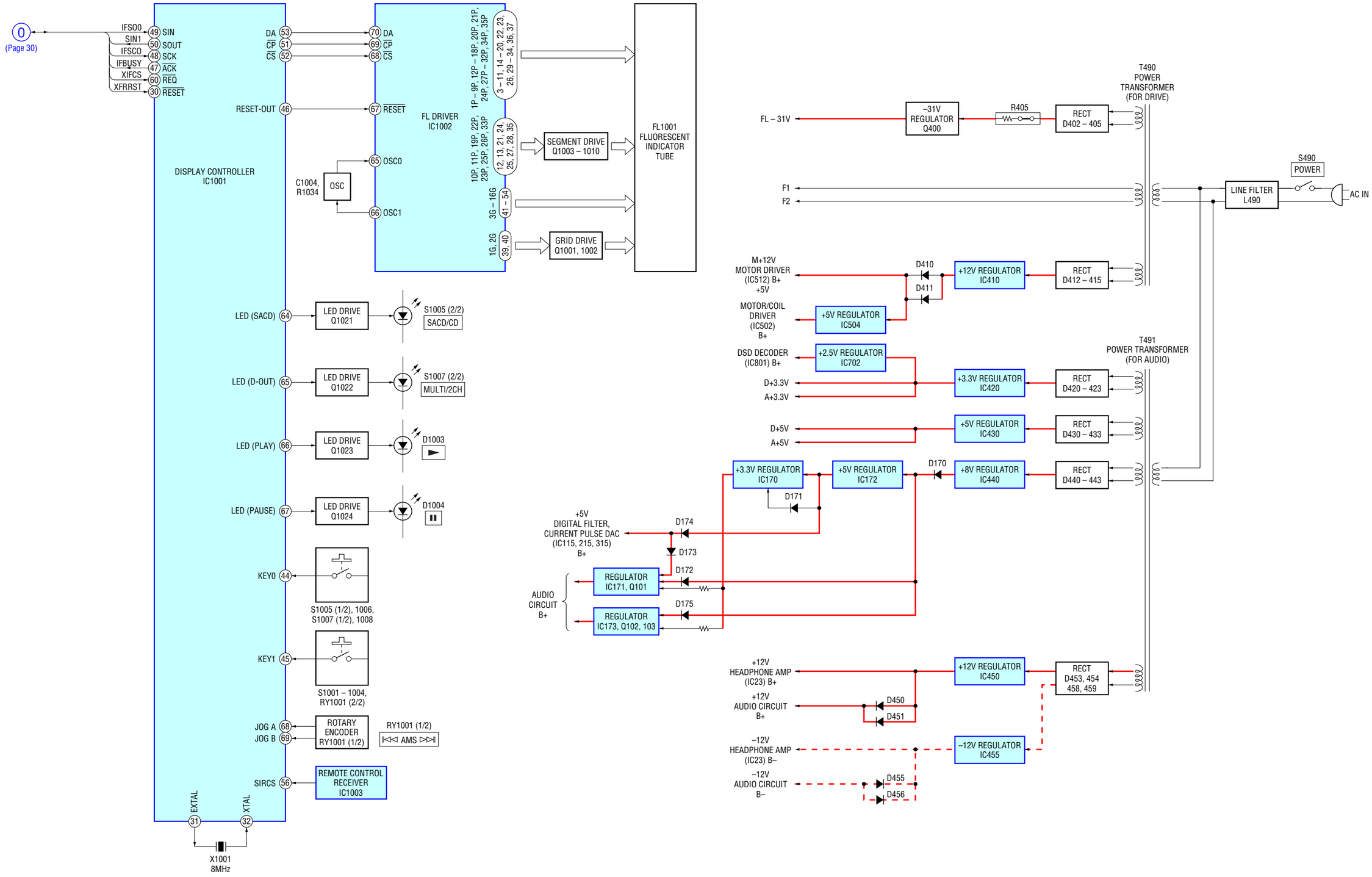

5-6. NOTE FOR PRINTED WIRING BOARDS AND SCHEMATIC DIAGRAMS

Note on Printed Wiring Board:
- ○——— : parts extracted from the component side.
- ——— : parts extracted from the conductor side.
- ▬ : Pattern from the side which enables seeing.

(The other layers' patterns are not indicated.)

Caution:	
Pattern face side: (Conductor Side)	Parts on the pattern face side seen from the pattern face are indicated.
Parts face side: (Component Side)	Parts on the parts face side seen from the parts face are indicated.

- Main board is multi-layer printed board.
  However, the patterns of intermediate-layer have not been included in diagram.
- Indication of transistor

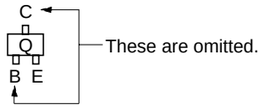

Note on Schematic Diagram:
- All capacitors are in µF unless otherwise noted. pF: µµF 50 WV or less are not indicated except for electrolytics and tantalums.
- All resistors are in Ω and ¹/₄ W or less unless otherwise specified.
- △ : internal component.
- : fusible resistor.
- ▭ : panel designation.

Note: The components identified by mark ⚠ or dotted line with mark ⚠ are critical for safety.
Replace only with part number specified.

- ▬▬ : B+ Line.
- ▬ ▬ ▬ : B– Line.
- Voltages and waveforms are dc with respect to ground under no-signal conditions.
  no mark : CD PLAY (ANALOG OUT)
  ( ) : SACD PLAY
  《 》 : CD PLAY (DIGITAL OUT)
- Voltages are taken with a VOM (Input impedance 10 MΩ). Voltage variations may be noted due to normal production tolerances.
- Waveforms are taken with a oscilloscope. Voltage variations may be noted due to normal production tolerances.
- Circled numbers refer to waveforms.
- Signal path.
  : SACD PLAY
  : CD PLAY (ANALOG OUT)
  : CD PLAY (DIGITAL OUT)

- **Circuit Boards Location**

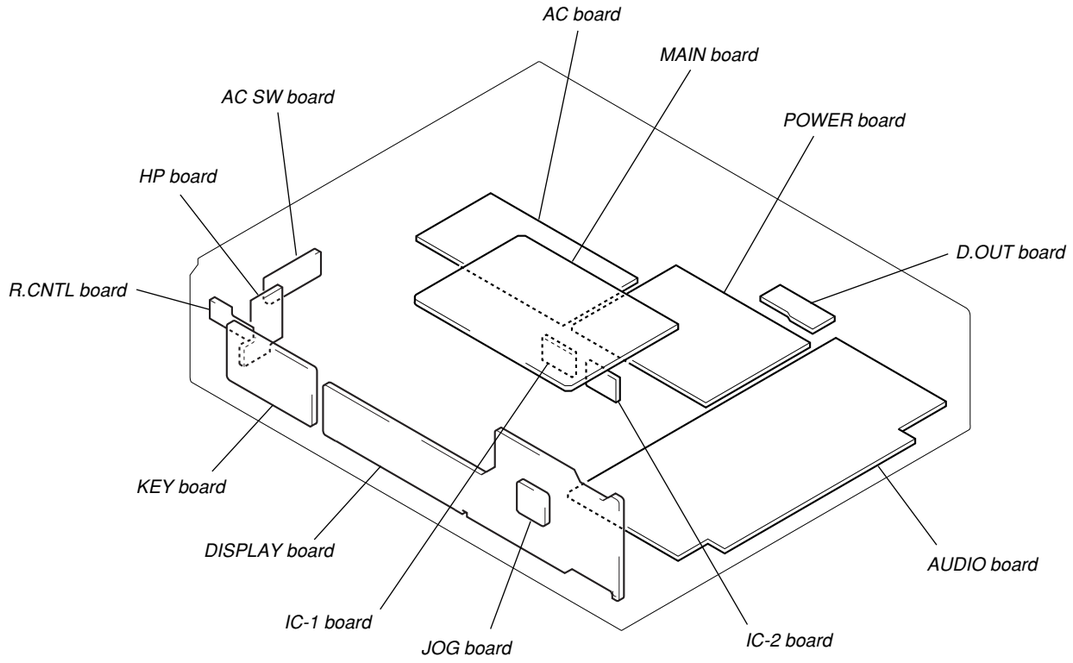

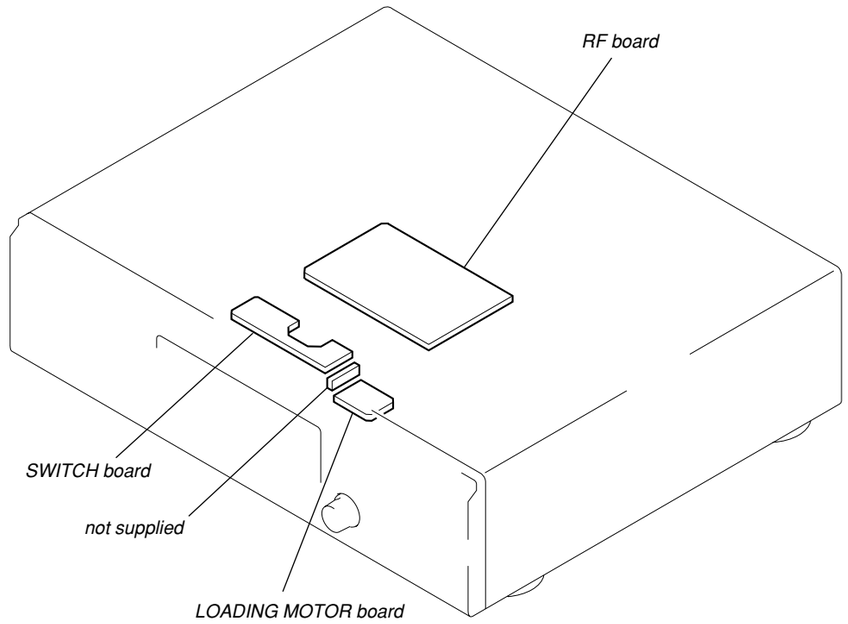

5-7. PRINTED WIRING BOARDS – LOADING MOTOR/RF/SWITCH Boards –

• See page 33 for Circuit Boards Location.

- **Semiconductor Location**

Ref. No.	Location
D001	B-7
D002	B-5
IC001	E-5
IC004	G-4
IC081	C-3
Q001	C-5
Q002	C-4
Q003	C-4
Q005	B-5

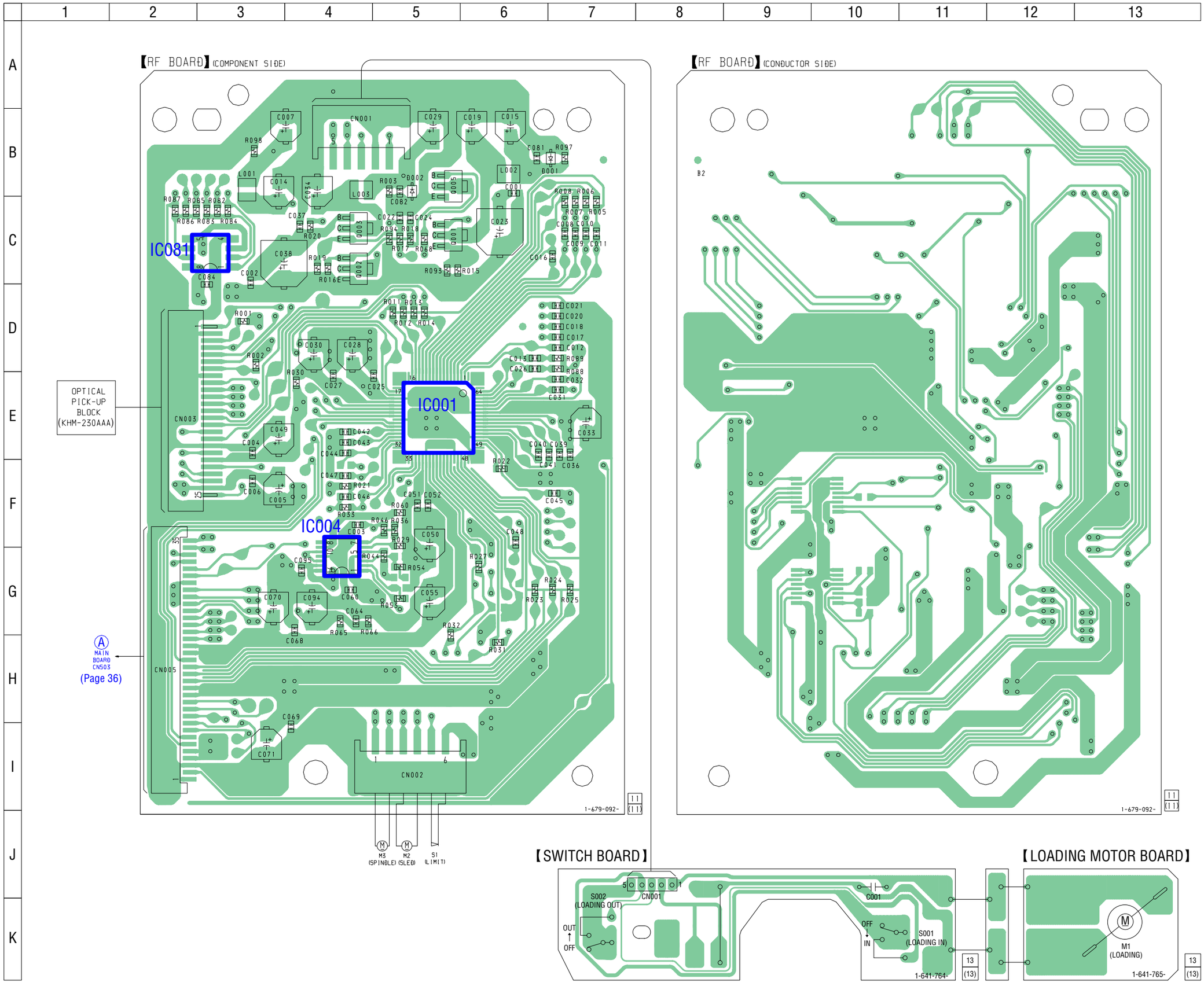

5-8. SCHEMATIC DIAGRAM – LOADING MOTOR/RF/SWITCH Boards –

• See page 43 for Waveforms. • See page 55 for IC Block Diagram.

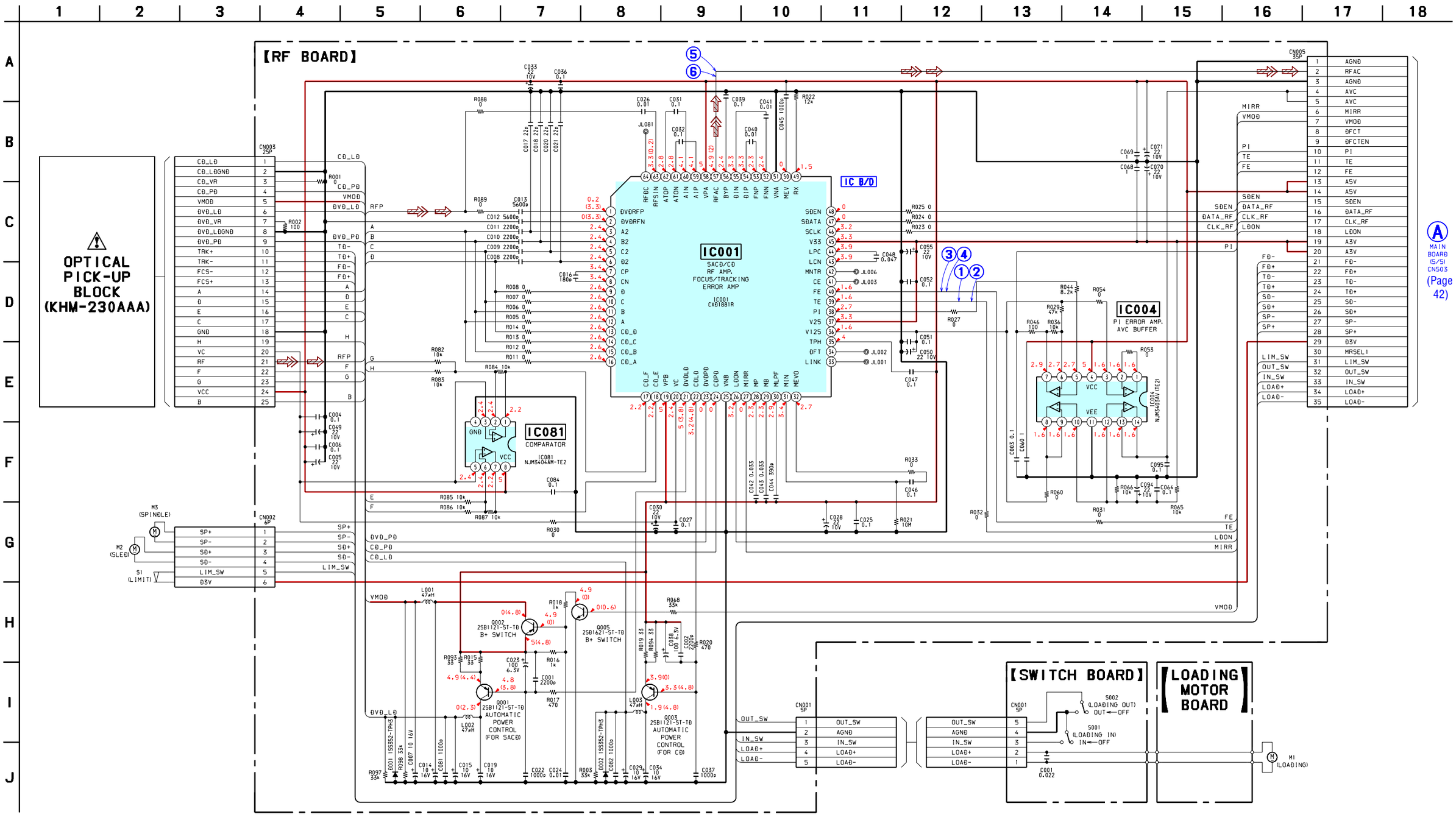

5-9. PRINTED WIRING BOARD – MAIN Board (Component Side) –

• See page 33 for Circuit Boards Location.

- **Semiconductor Location**

Ref. No.	Location
IC509	D-7
IC701	E-11
IC801	H-11
IC901	H-4
IC902	H-7
IC905	G-6

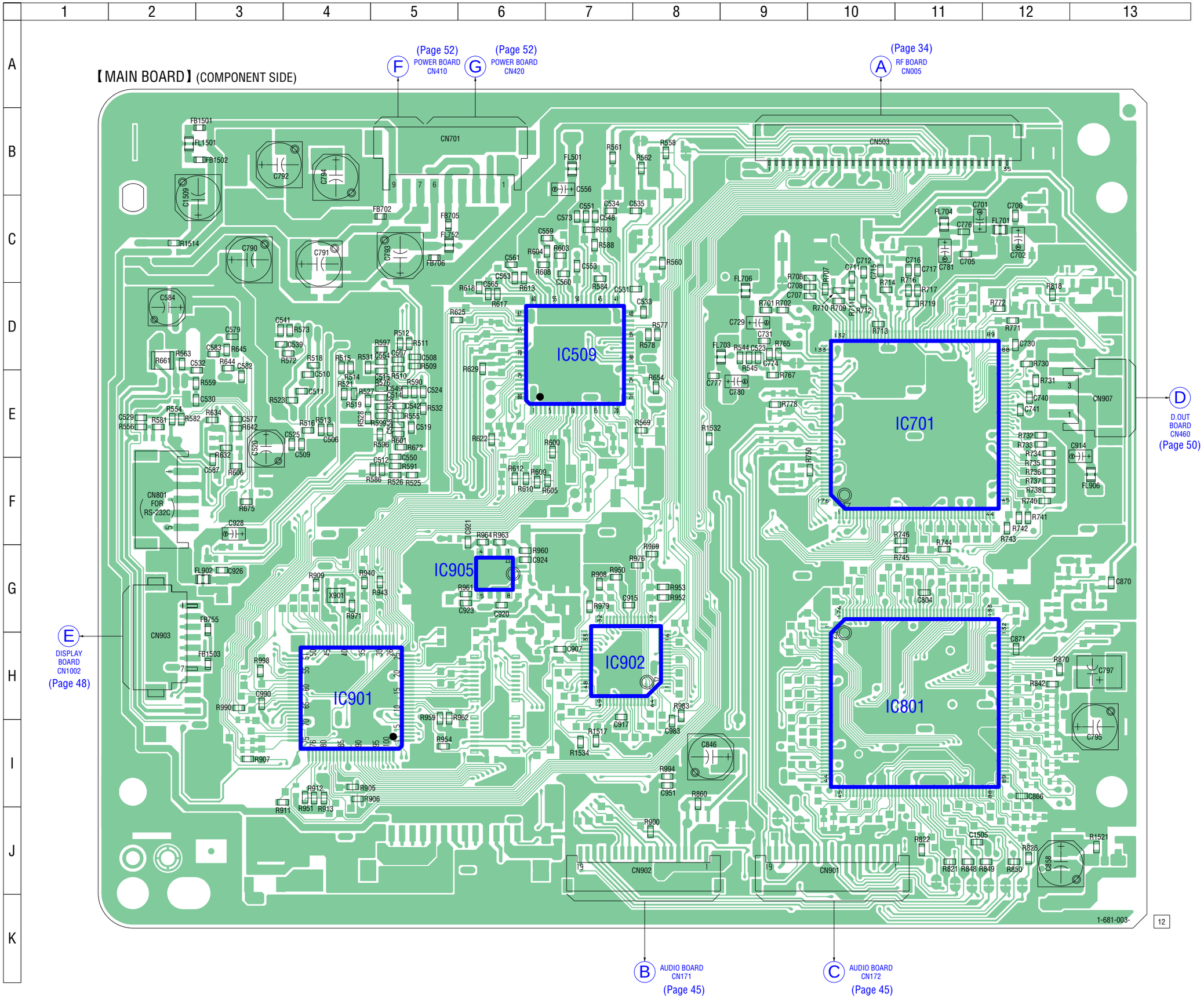

5-10. PRINTED WIRING BOARD – MAIN Board (Conductor Side) –

• See page 33 for Circuit Boards Location.

【MAIN BOARD】(CONDUCTOR SIDE)

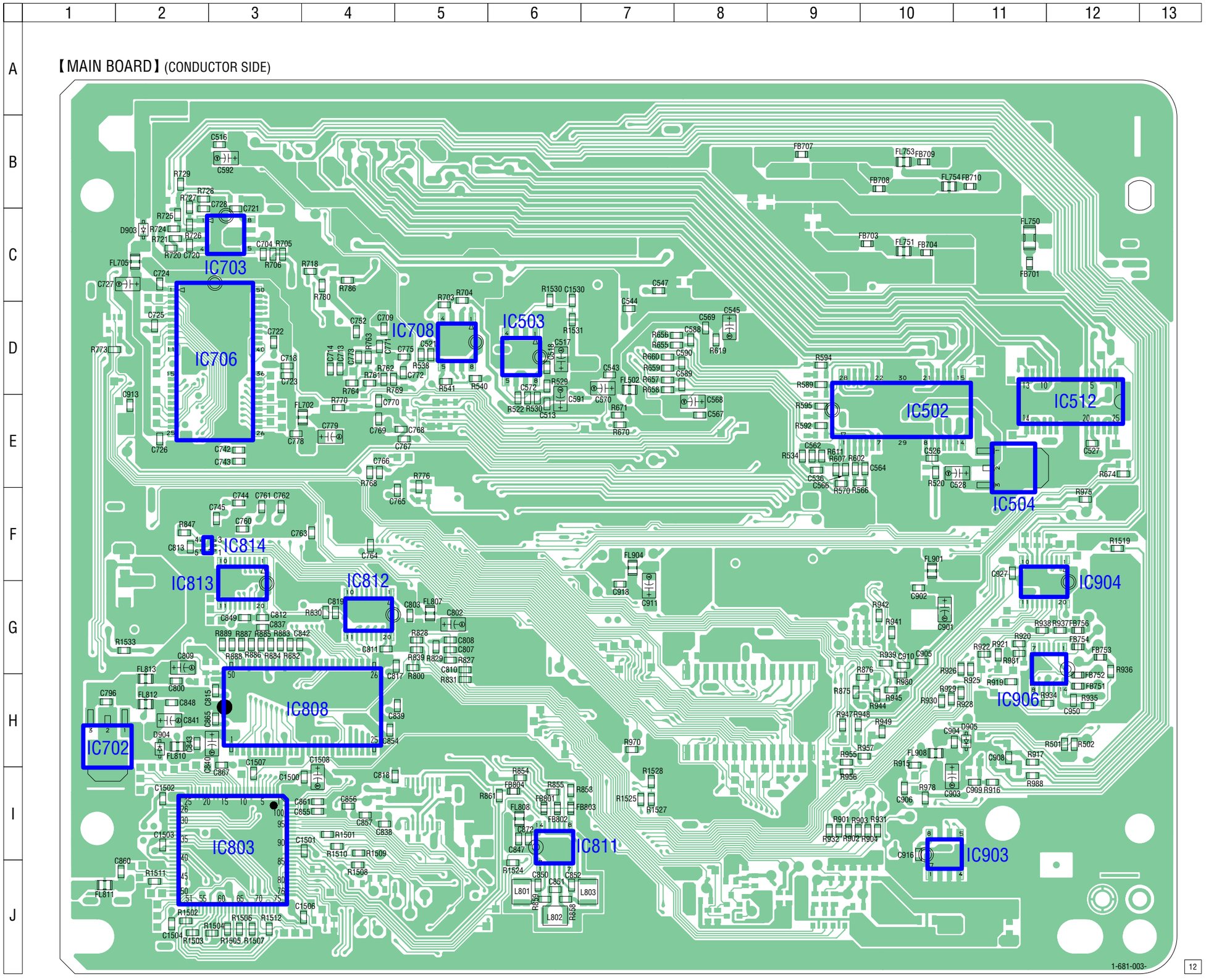

- **Semiconductor Location**

Ref. No.	Location
D903	C-2
D904	H-2
D905	H-11
IC502	E-10
IC503	D-6
IC504	E-11
IC512	E-12
IC702	H-1
IC703	C-3
IC706	D-3
IC708	D-5
IC803	I-3
IC808	H-4
IC811	I-6
IC812	G-4
IC813	G-3
IC814	F-2
IC903	I-10
IC904	G-11
IC906	G-12

5-11. SCHEMATIC DIAGRAM – MAIN Board (1/5) – • See page 55 for IC Block Diagram.

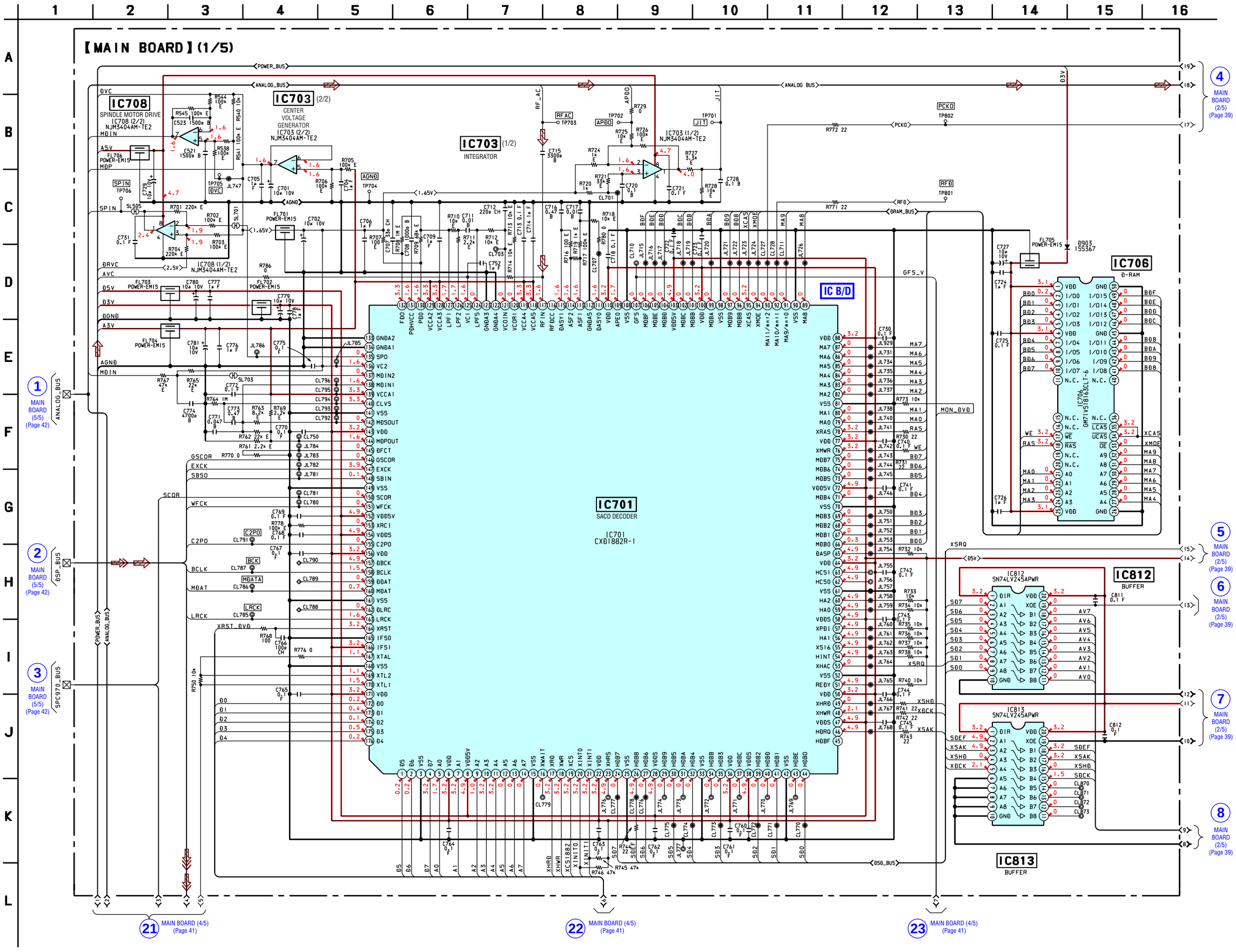

5-12. SCHEMATIC DIAGRAM – MAIN Board (2/5) – • See page 43 for Waveforms.

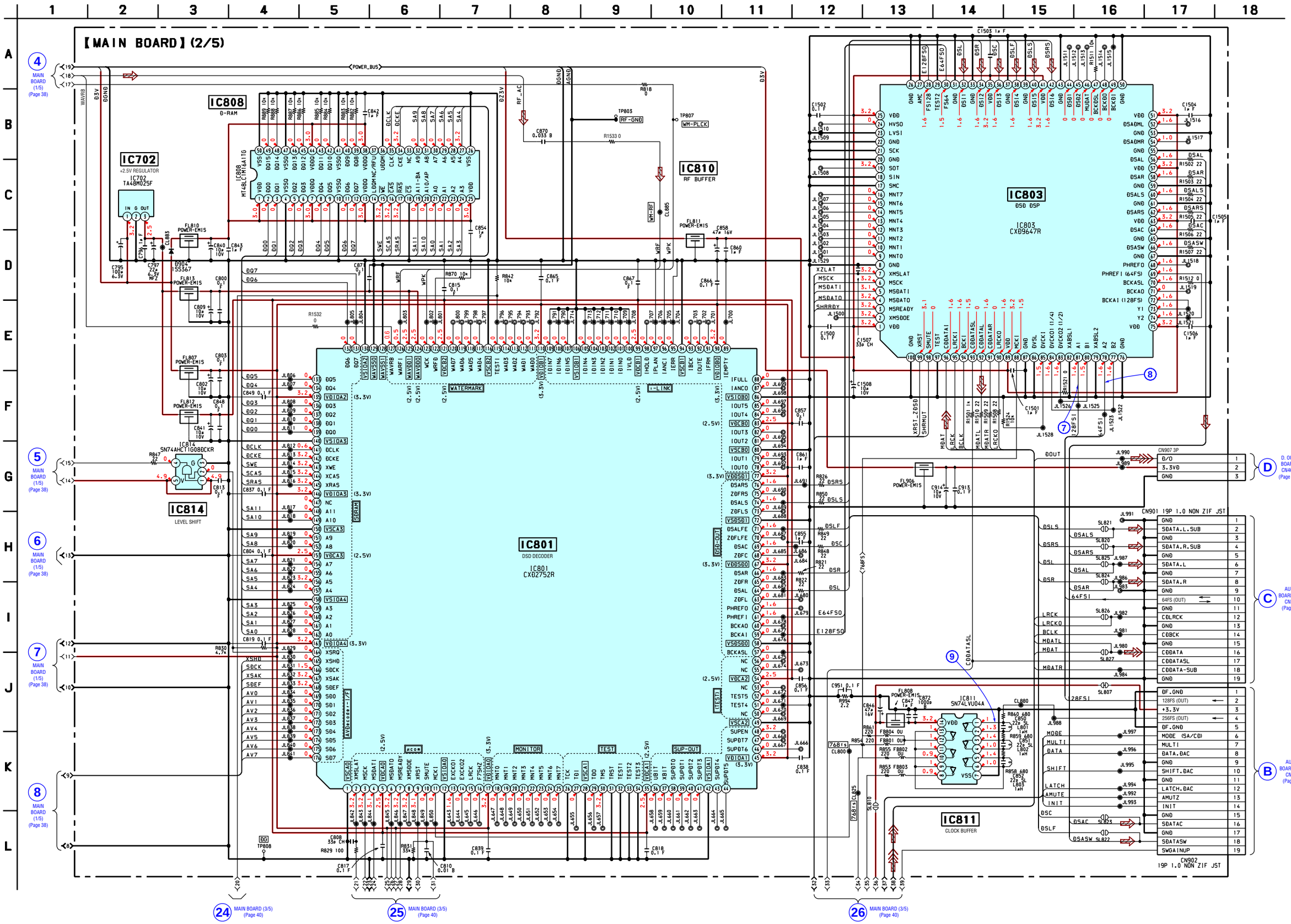

5-13. SCHEMATIC DIAGRAM – MAIN Board (3/5) –

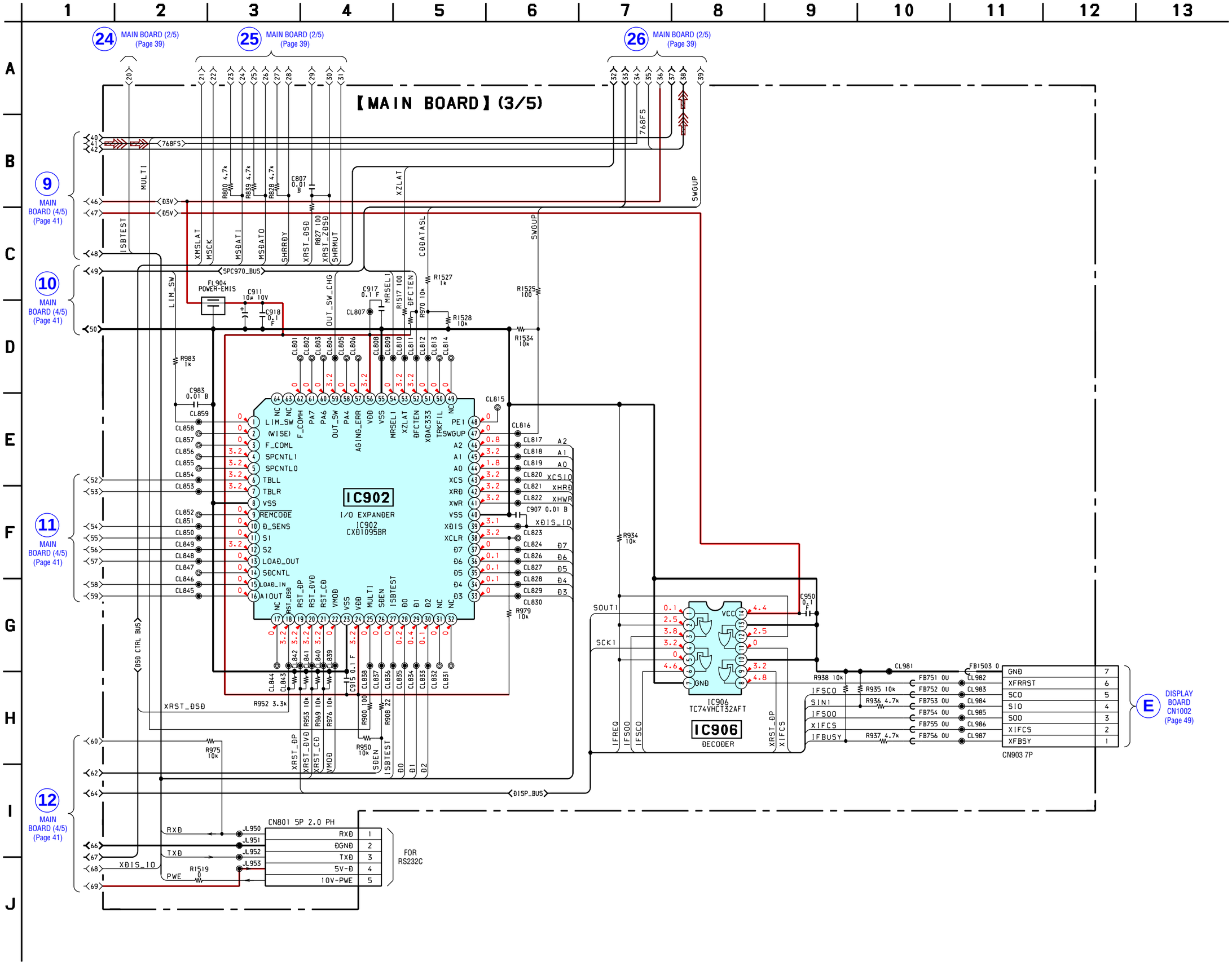

5-14. SCHEMATIC DIAGRAM – MAIN Board (4/5) – • See page 43 for Waveform. • See page 55 for IC Block Diagrams.

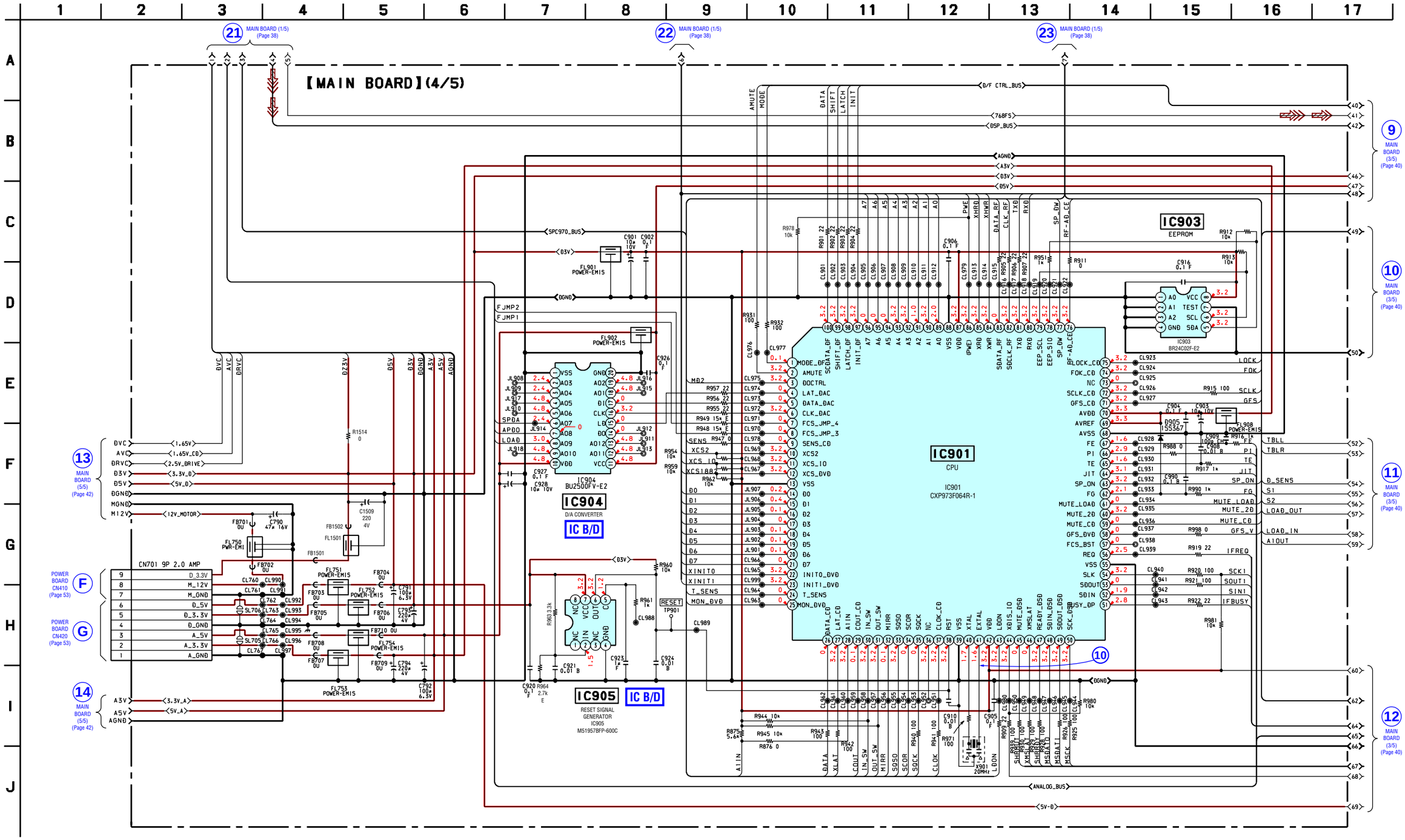

5-15. SCHEMATIC DIAGRAM – MAIN Board (5/5) –

• See page 43 for Waveforms. • See page 55 for IC Block Diagram.

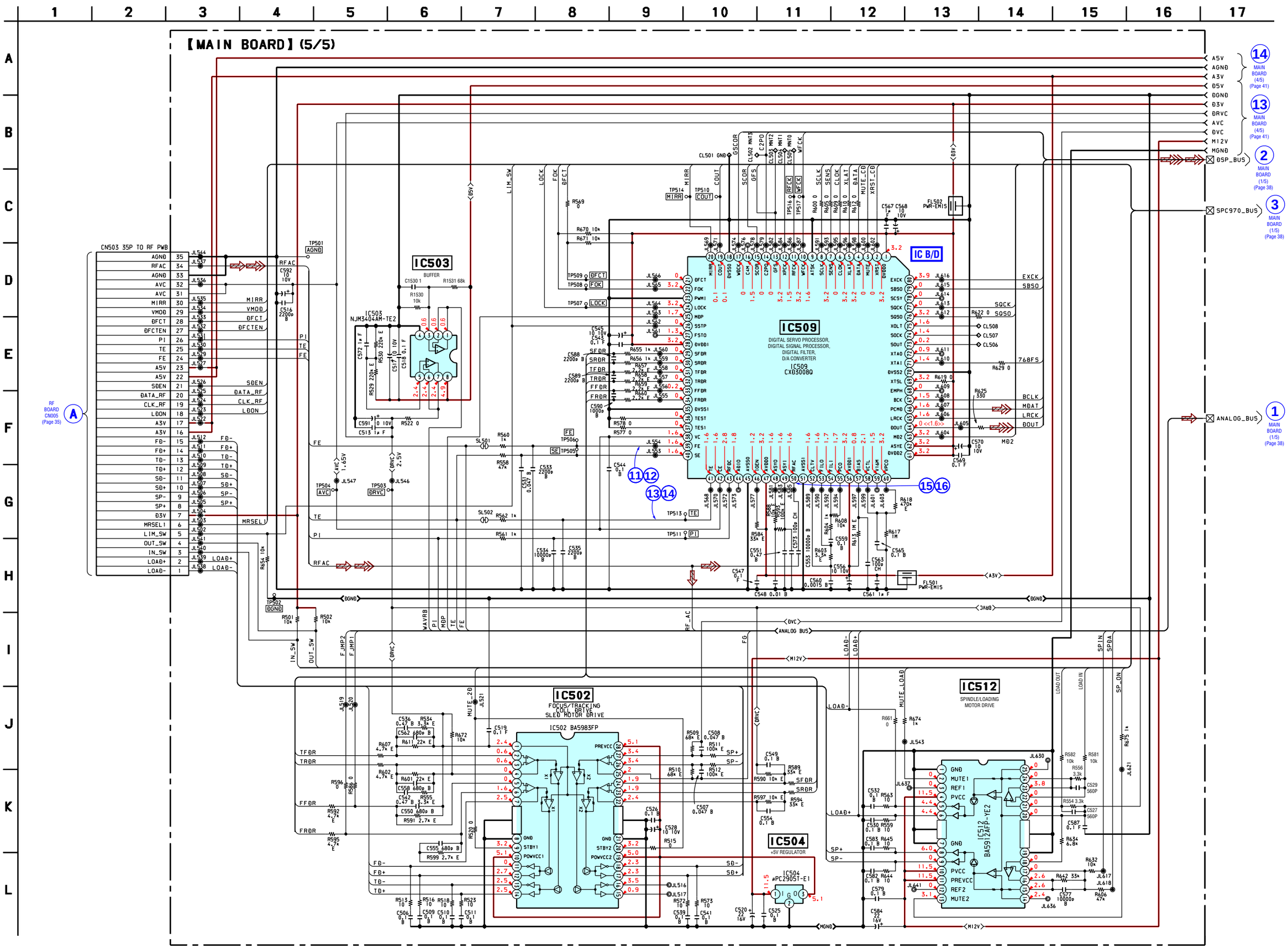

• **Waveforms**

– RF Board –

❶ IC001 ㊴ (TE) (CD PLAY)

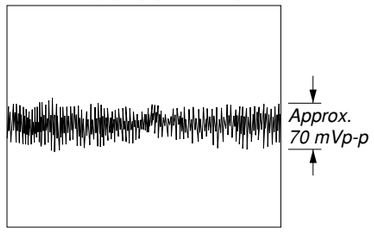

❷ IC001 ㊴ (TE) (SACD PLAY)

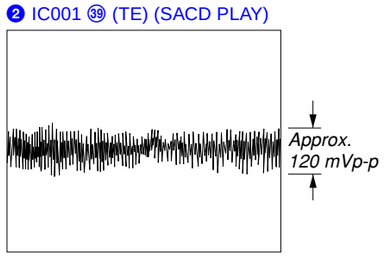

❸ IC001 ㊵ (FE) (CD PLAY)

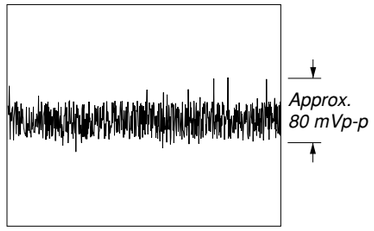

❹ IC001 ㊵ (FE) (SACD PLAY)

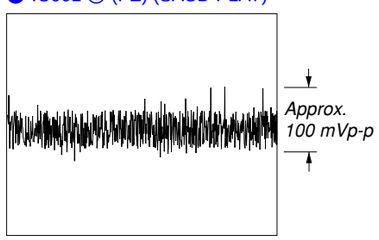

❺ IC001 ㊼ (RFAC) (CD PLAY)

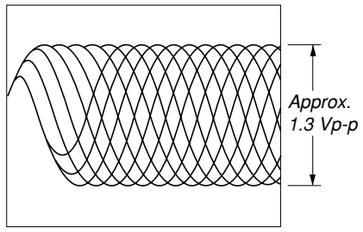

❻ IC001 ㊼ (RFAC) (SACD PLAY)

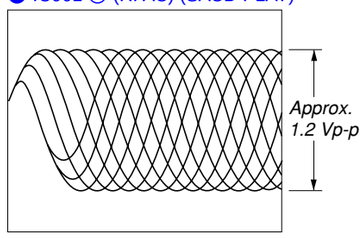

– MAIN Board –

❼ IC803 ㊽ (A1)

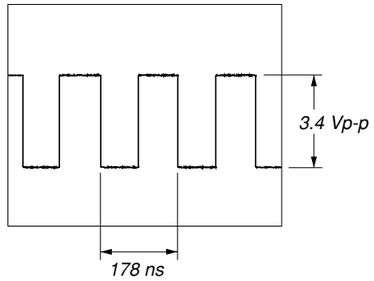

❽ IC803 ㊼ (A2)

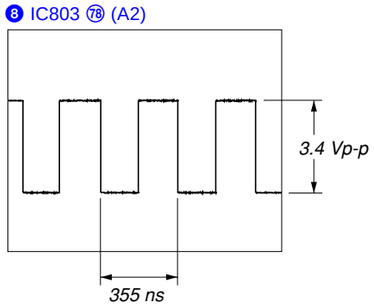

❾ IC811 ①

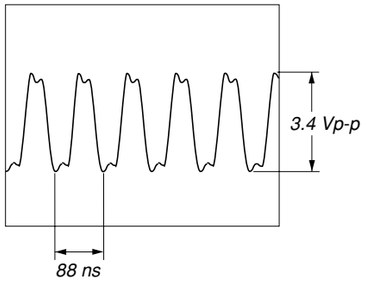

❿ IC901 ㊶ (EXTAL)

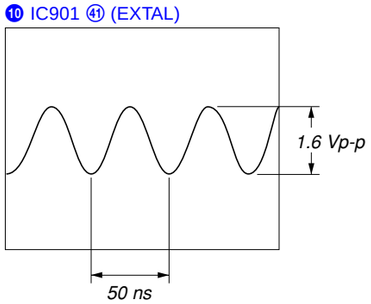

⓫ IC509 ㊴ (FE) (CD PLAY)

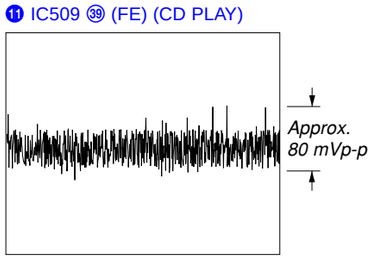

– AUDIO Board –

⓬ IC509 ㊴ (FE) (SACD PLAY)

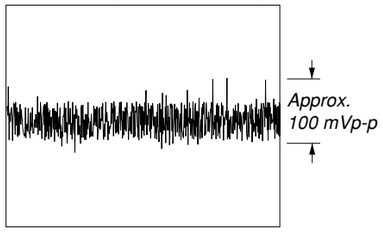

⓭ IC509 ㊶ (TE) (CD PLAY)

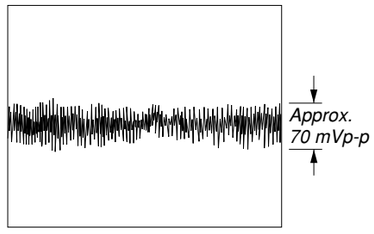

⓮ IC509 ㊶ (TE) (SACD PLAY)

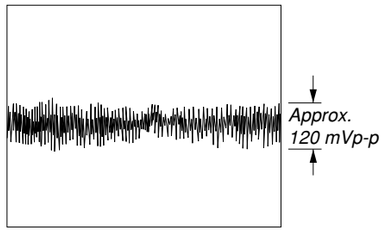

⓯ IC509 ㊿ (RFAC) (CD PLAY)

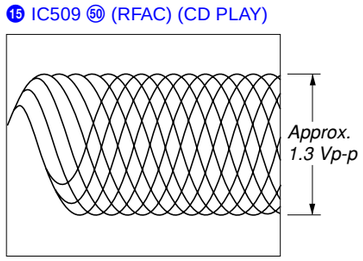

⓰ IC509 ㊿ (RFAC) (SACD PLAY)

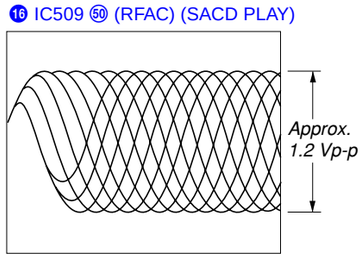

⓱ IC272 ②

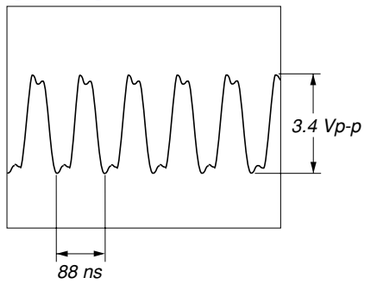

⓲ IC271 ⑭ (QA)

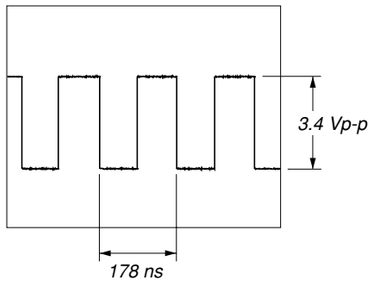

⓳ IC271 ⑬ (QB)

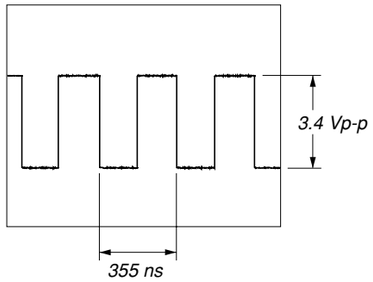

– DISPLAY Board –

⓴ IC1001 ㉛ (EXTAL)

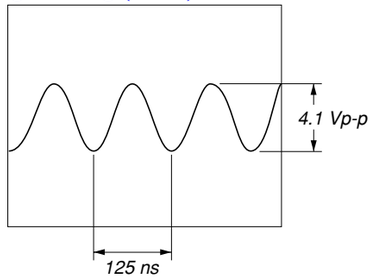

5-16. PRINTED WIRING BOARD – AUDIO Board (Component Side) –

• See page 33 for Circuit Boards Location.

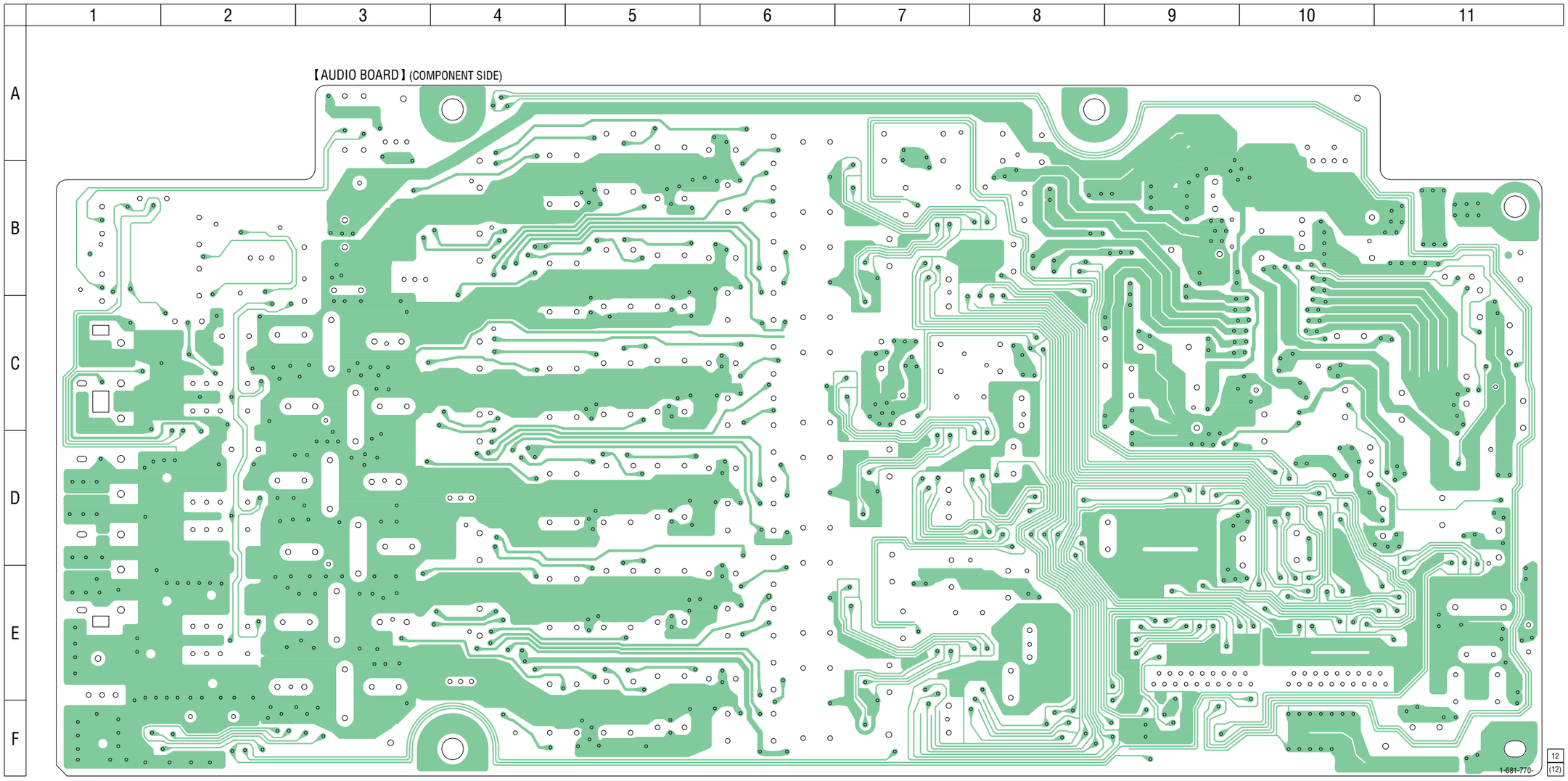

5-17. PRINTED WIRING BOARD – AUDIO Board (Conductor Side) – • See page 33 for Circuit Boards Location.

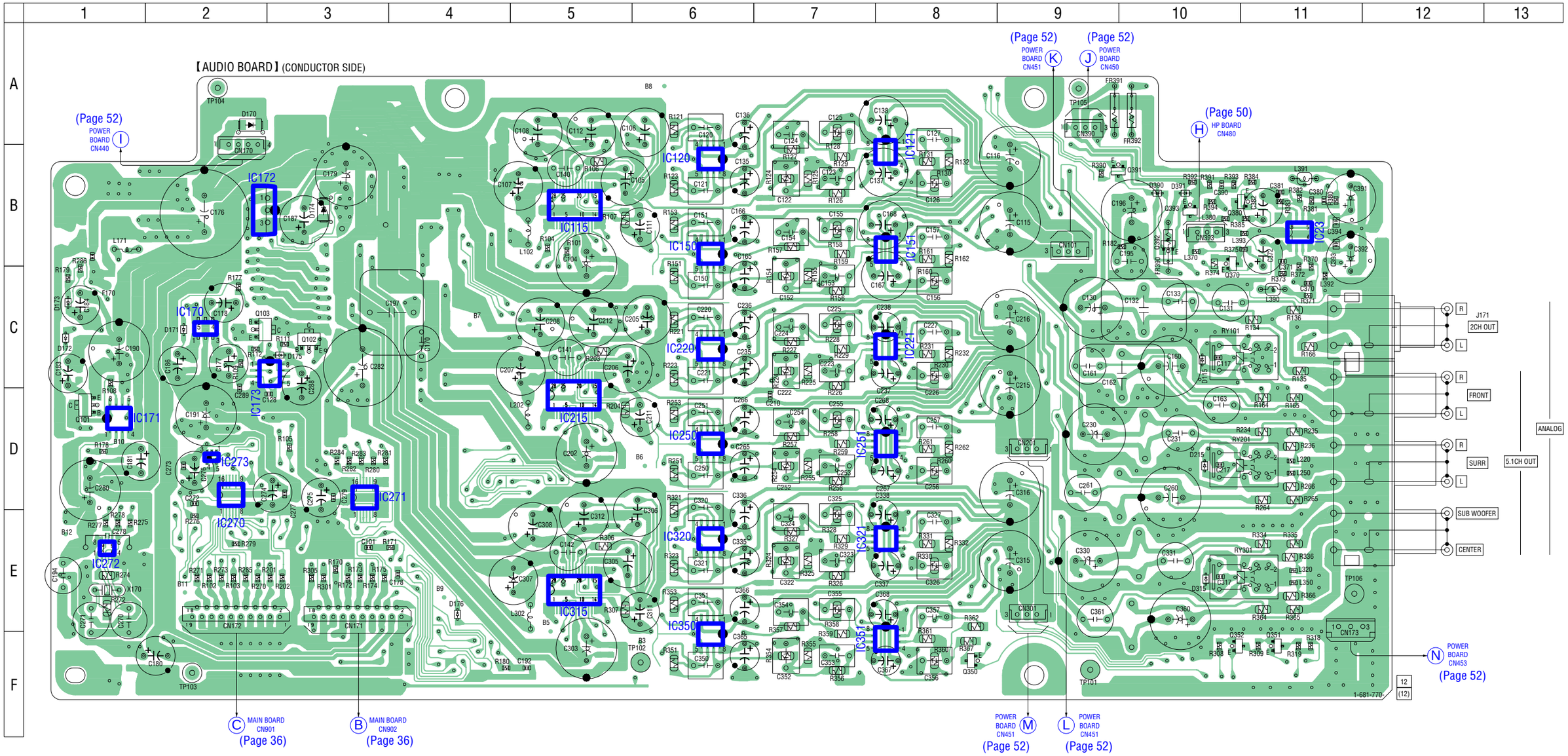

• **Semiconductor Location**

Ref. No.	Location	Ref. No.	Location	Ref. No.	Location	Ref. No.	Location
D115	C-10	IC23	B-11	IC250	D-6	Q102	C-3
D170	A-2	IC115	B-5	IC251	D-8	Q103	C-2
D171	C-2	IC120	B-6	IC270	D-2	Q350	F-8
D172	C-1	IC121	B-8	IC271	D-3	Q351	F-11
D173	C-1	IC150	B-6	IC272	E-1	Q352	F-10
D174	B-3	IC151	B-8	IC273	D-2	Q370	B-10
D175	C-3	IC170	C-2	IC315	E-5	Q380	B-11
D176	E-4	IC171	D-1	IC320	E-6	Q391	B-9
D215	D-10	IC172	B-2	IC321	E-8	Q392	B-10
D315	E-10	IC173	C-3	IC350	F-6	Q393	B-10
D390	B-10	IC215	D-5	IC351	F-8		
D391	B-10	IC220	C-6				
		IC221	C-8	Q101	D-1		

5-18. SCHEMATIC DIAGRAM – AUDIO Board (1/2) –

• See page 43 for Waveforms. • See page 55 for IC Block Diagrams.

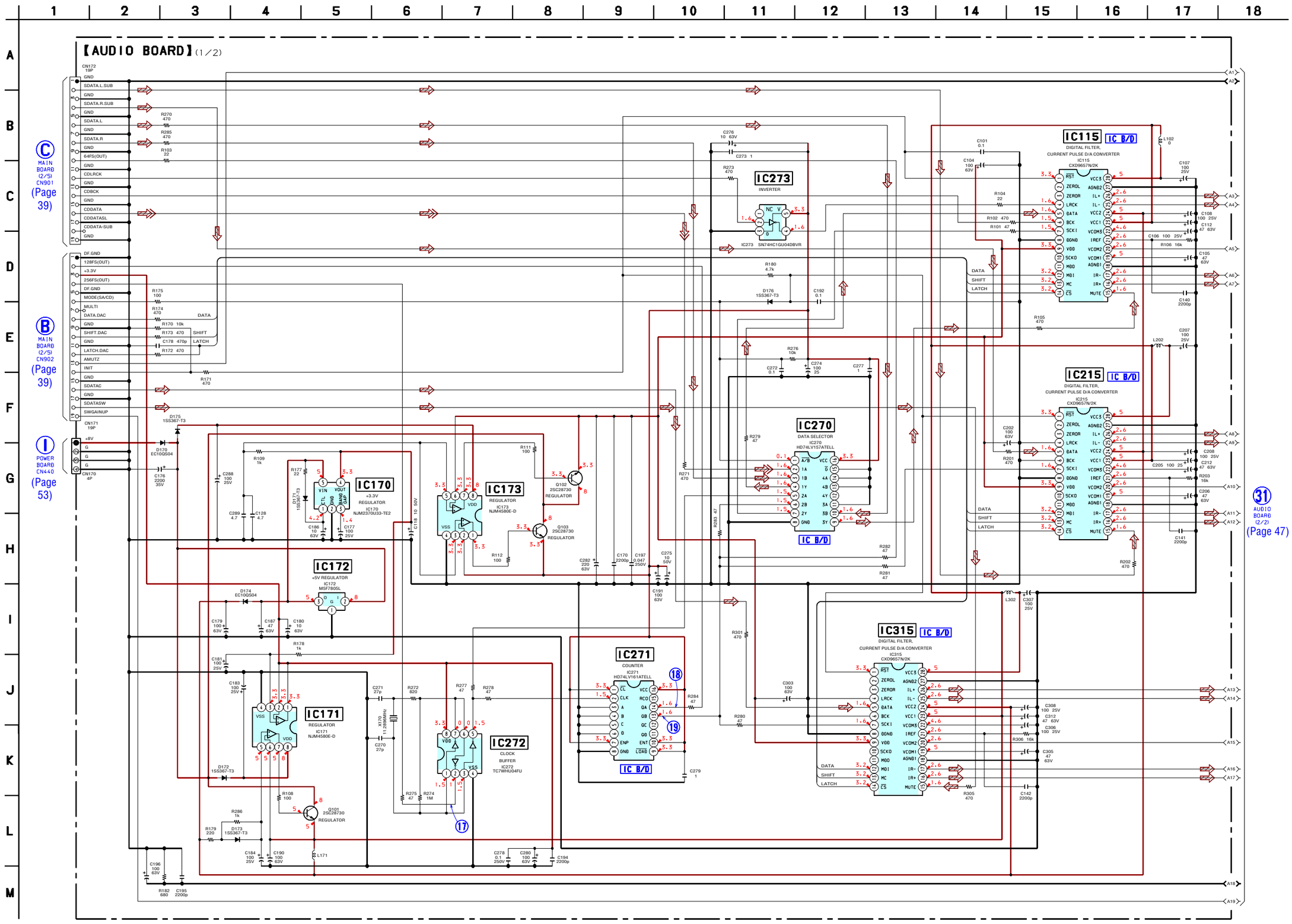

5-19. SCHEMATIC DIAGRAM – AUDIO Board (2/2) –

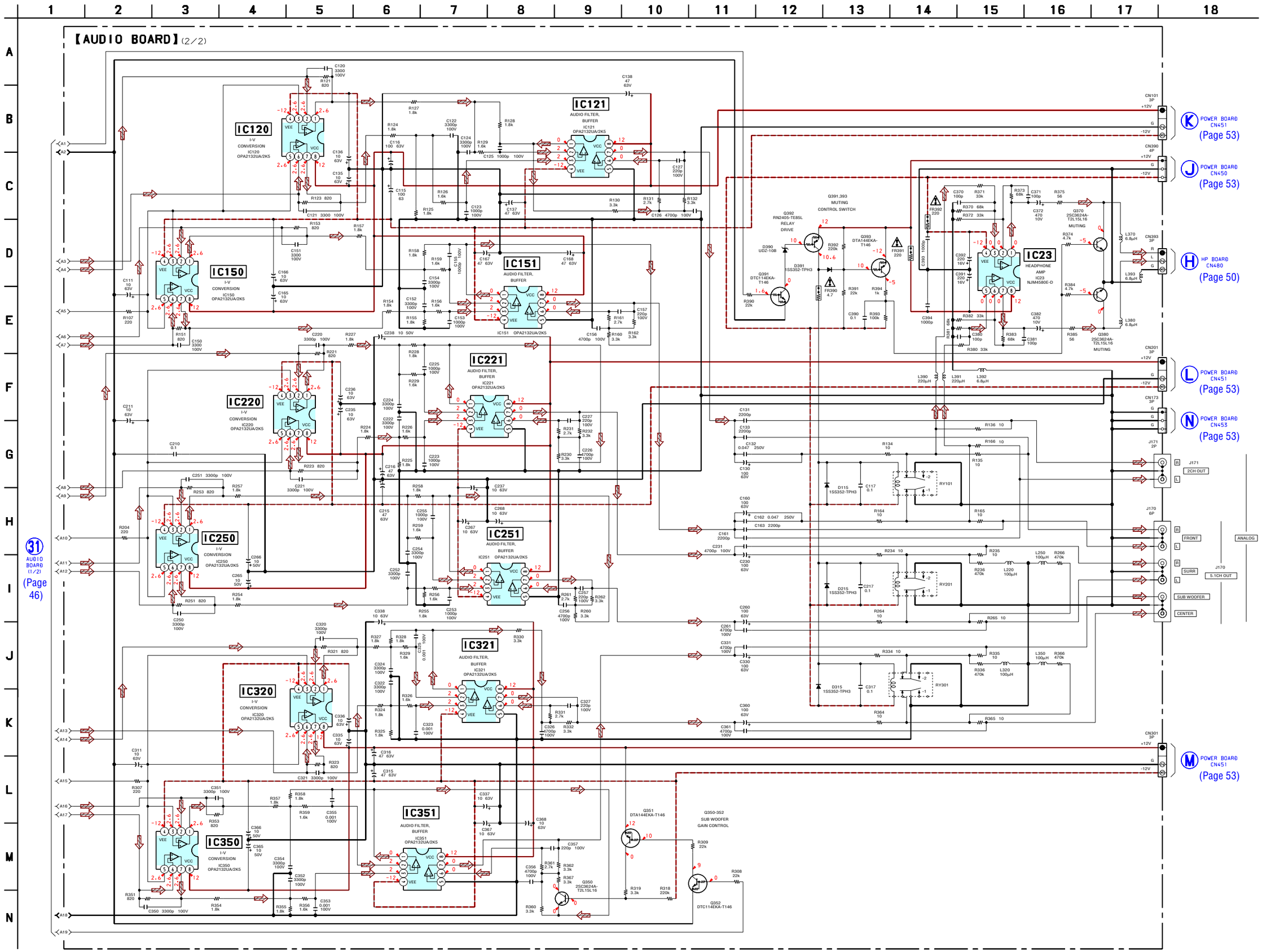

5-20. PRINTED WIRING BOARD – DISPLAY Board – • See page 33 for Circuit Boards Location.

【DISPLAY BOARD】(COMPONENT SIDE)

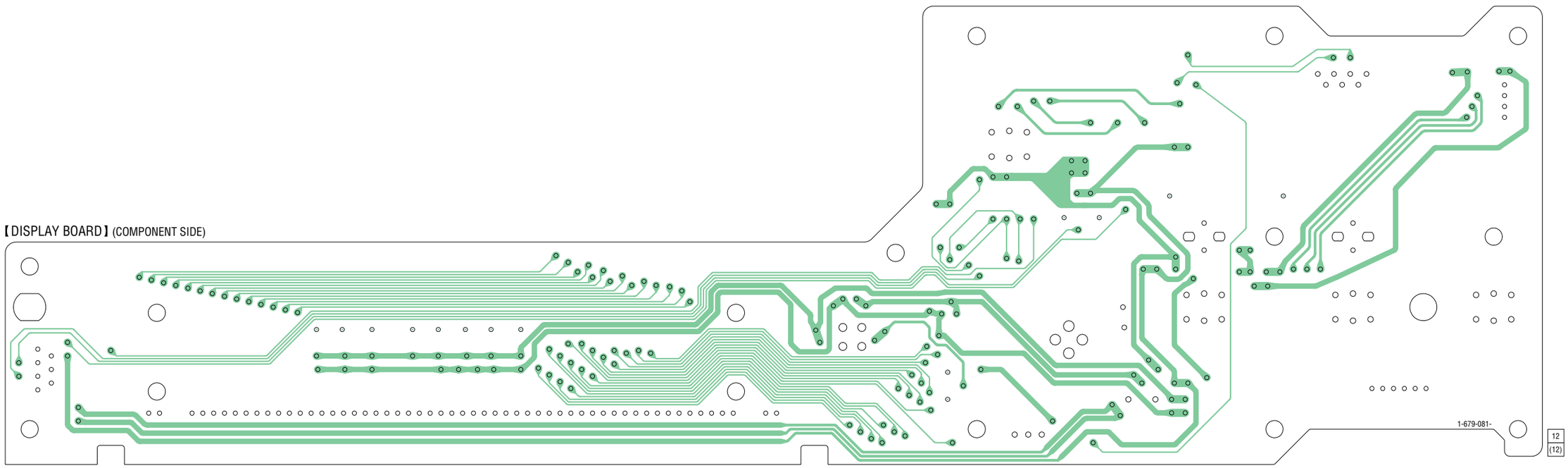

【DISPLAY BOARD】(CONDUCTOR SIDE)

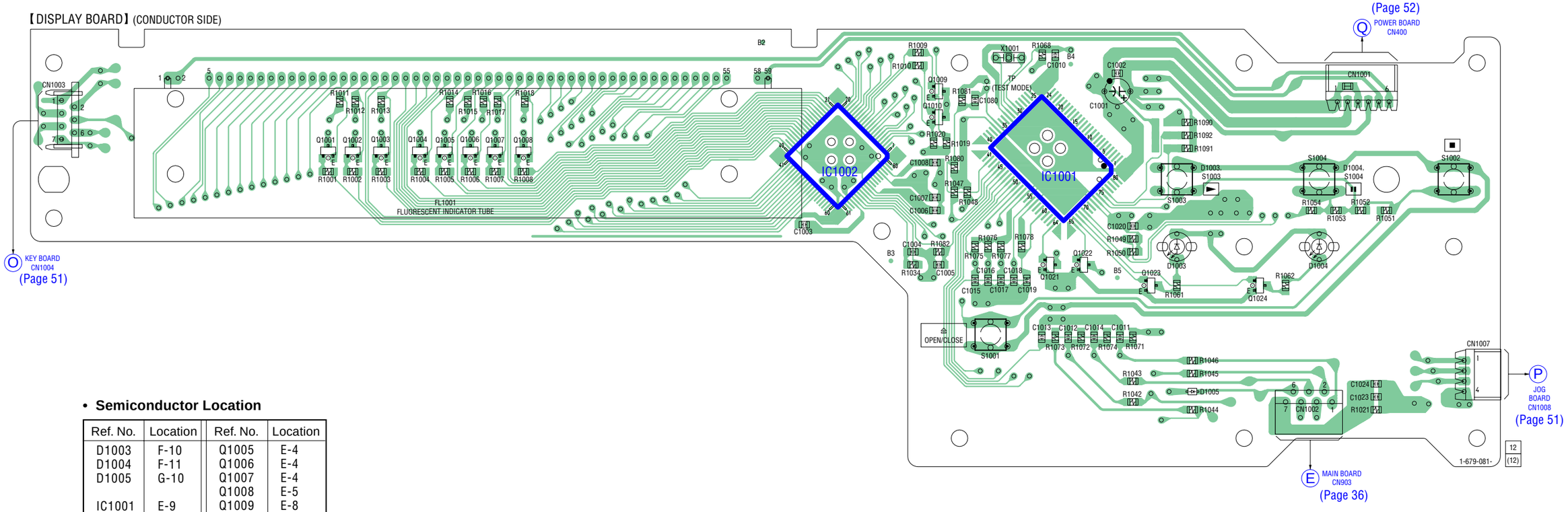

- **Semiconductor Location**

Ref. No.	Location	Ref. No.	Location
D1003	F-10	Q1005	E-4
D1004	F-11	Q1006	E-4
D1005	G-10	Q1007	E-4
		Q1008	E-5
IC1001	E-9	Q1009	E-8
IC1002	E-7	Q1010	E-8
		Q1021	F-9
Q1001	E-3	Q1022	F-9
Q1002	E-3	Q1023	F-10
Q1003	E-4	Q1024	F-10
Q1004	E-4		

5-21. SCHEMATIC DIAGRAM – DISPLAY Board –

• See page 43 for Waveform. • See page 55 for IC Block Diagram.

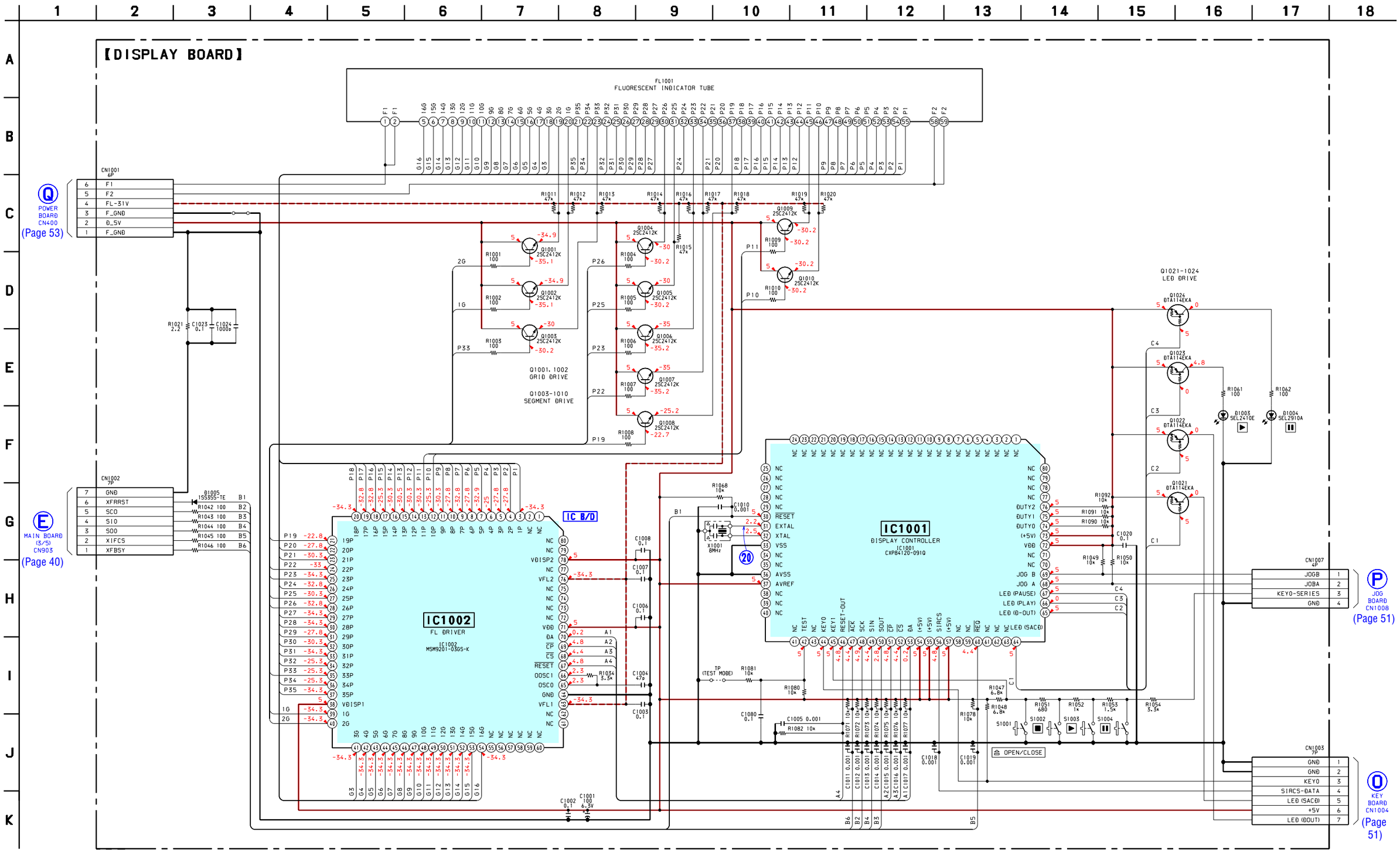

5-22. PRINTED WIRING BOARDS – D.OUT/HP Boards –

• See page 33 for Circuit Boards Location.

【D.OUT BOARD】(COMPONENT SIDE)

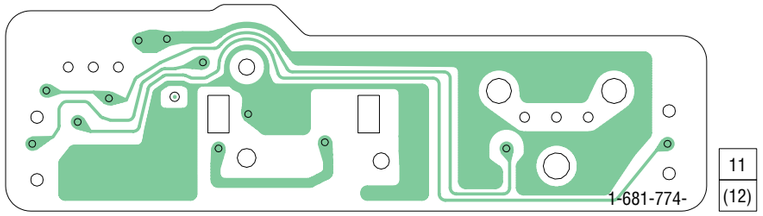

【D.OUT BOARD】(CONDUCTOR SIDE)

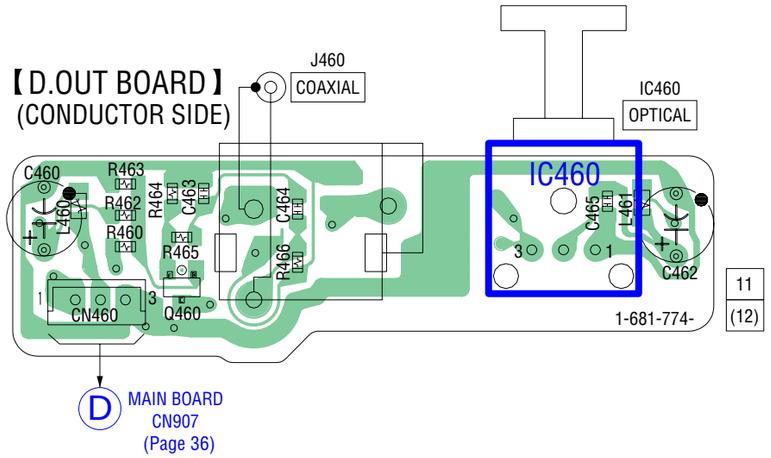

【HP BOARD】(COMPONENT SIDE)

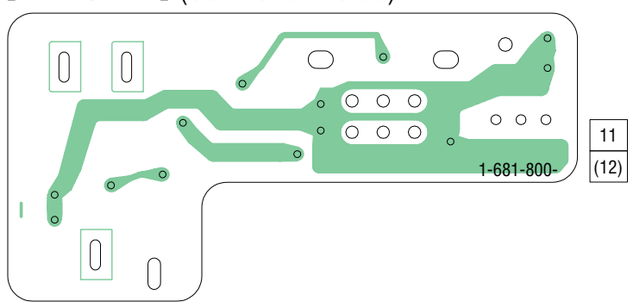

【HP BOARD】(CONDUCTOR SIDE)

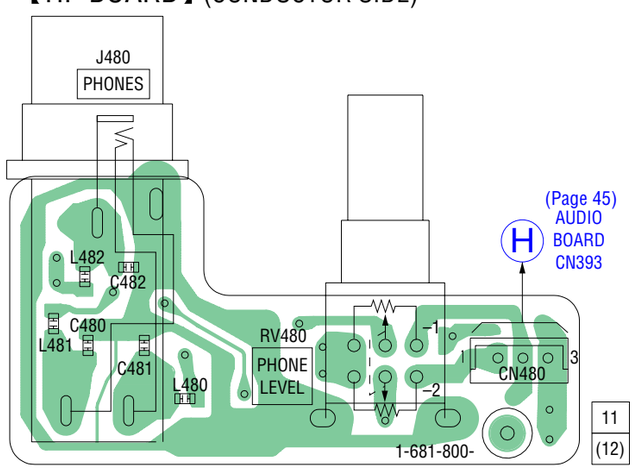

5-23. SCHEMATIC DIAGRAM – D.OUT/HP Boards –

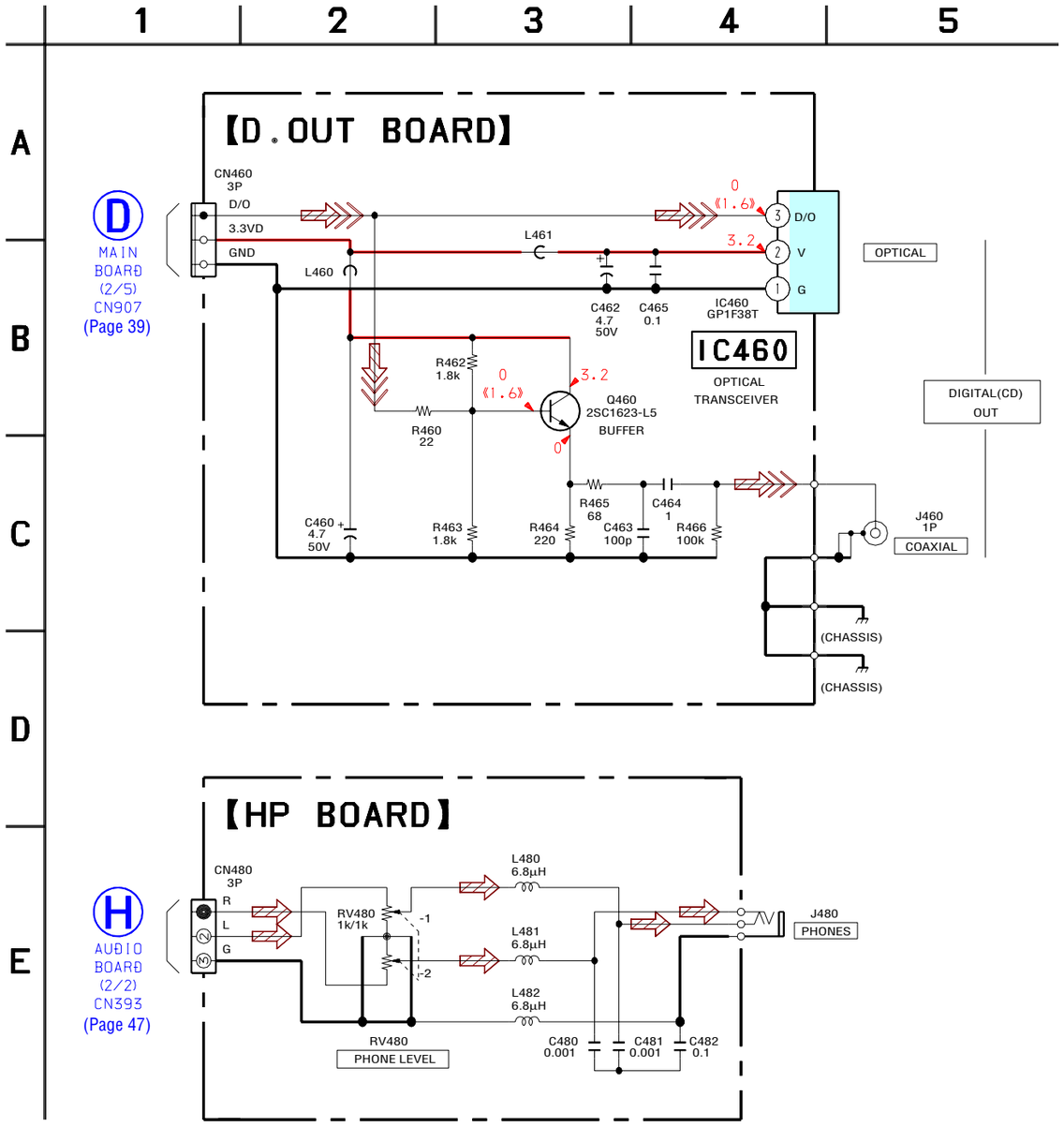

5-24. PRINTED WIRING BOARDS – JOG/KEY/R.CNTL Boards –

• See page 33 for Circuit Boards Location.

【KEY BOARD】(COMPONENT SIDE)

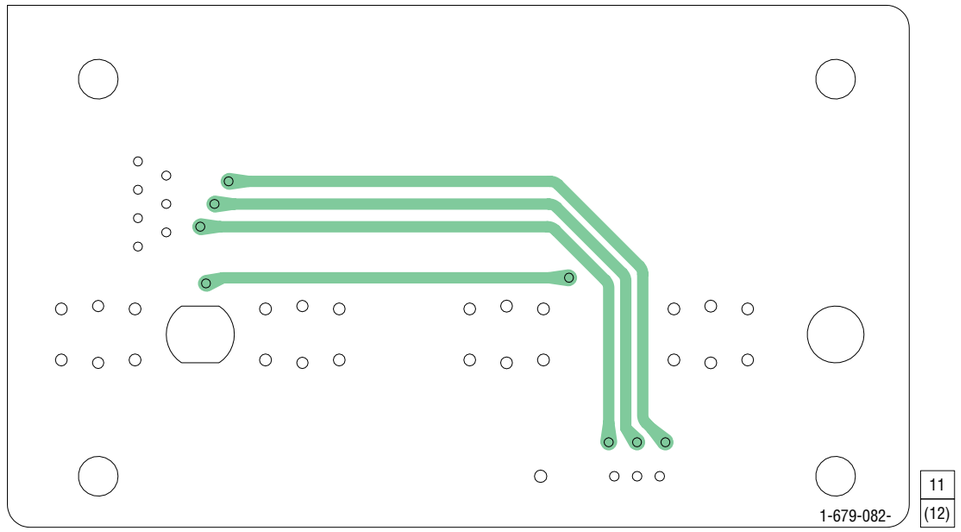

【KEY BOARD】(CONDUCTOR SIDE)

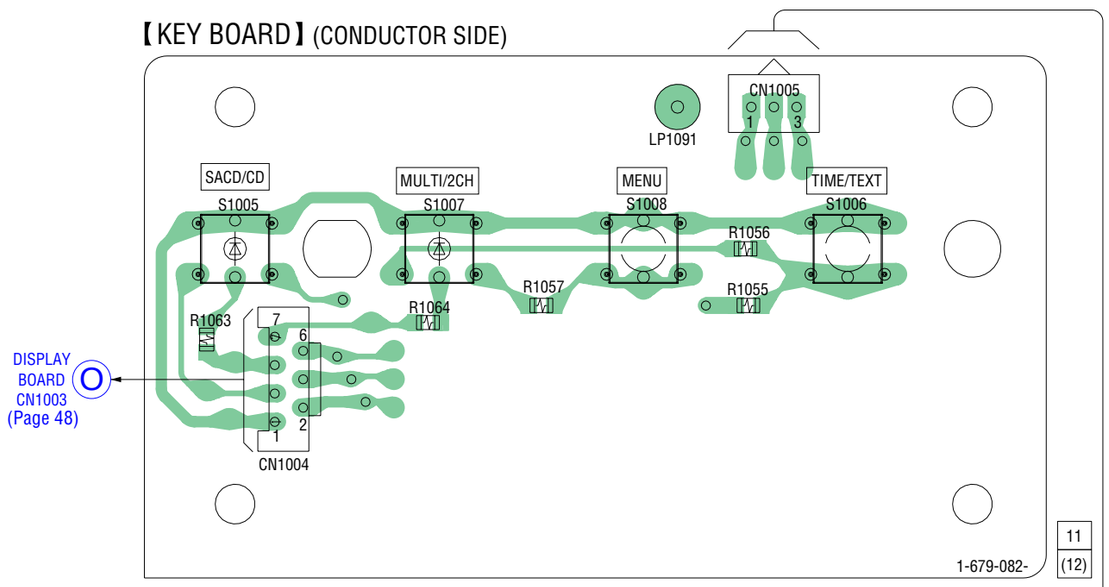

【JOG BOARD】

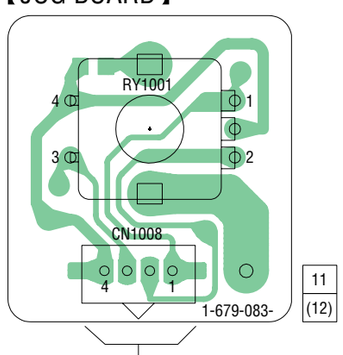

【R.CNTL BOARD】

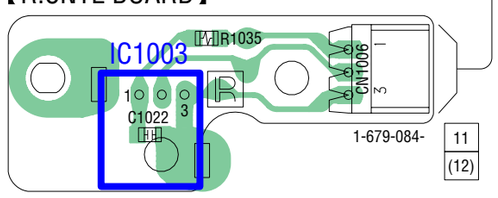

5-25. SCHEMATIC DIAGRAM – JOG/KEY/R.CNTL Boards –

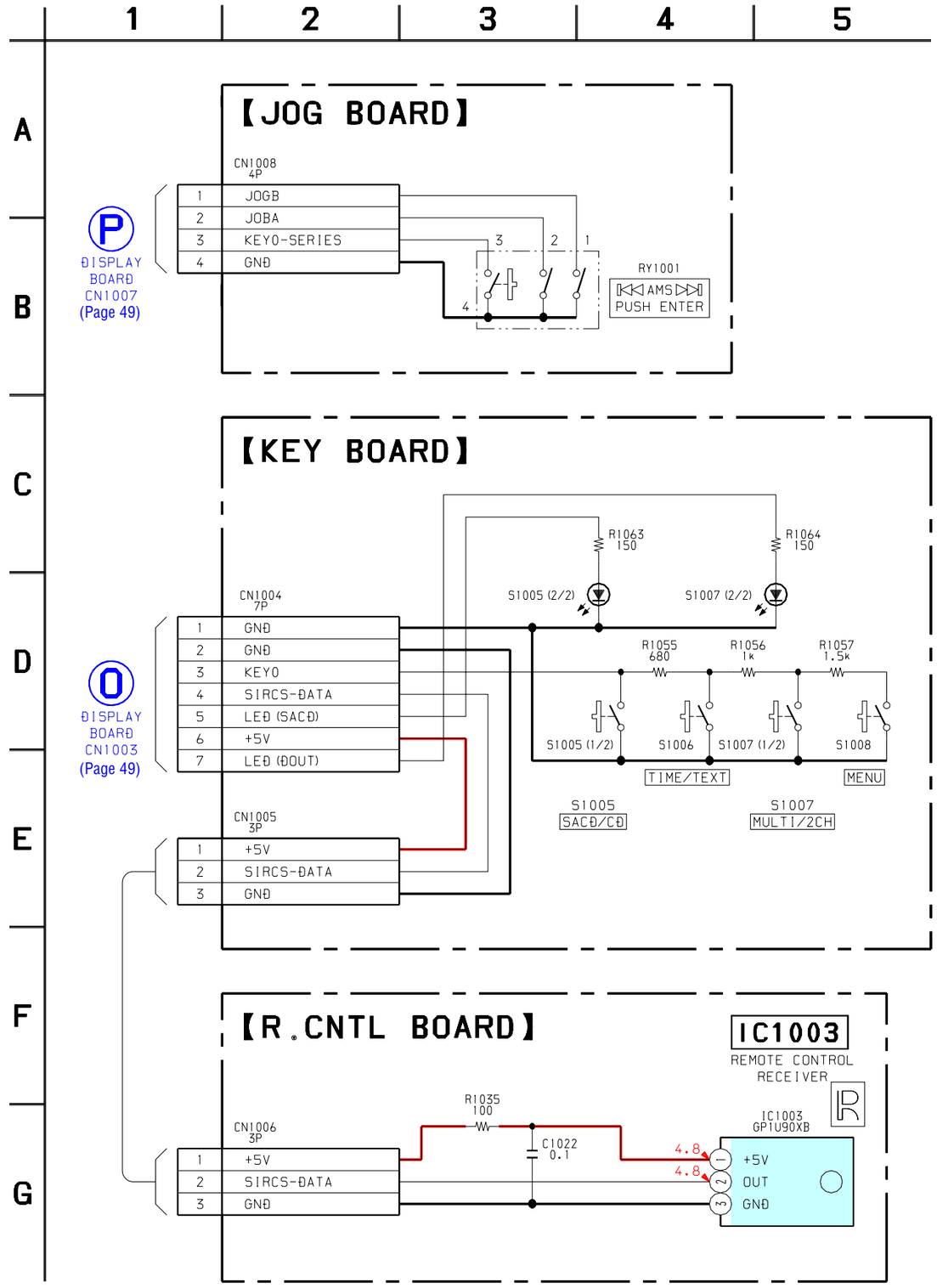

5-26. PRINTED WIRING BOARDS – IC-1/IC-2/POWER Boards –

• See page 33 for Circuit Boards Location.

【IC-2 BOARD】(COMPONENT SIDE)

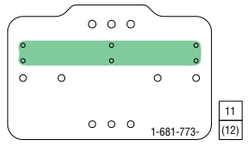

【IC-2 BOARD】(CONDUCTOR SIDE)

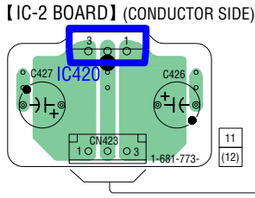

【IC-1 BOARD】(COMPONENT SIDE)

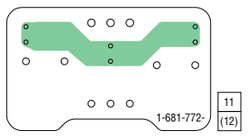

【IC-1 BOARD】(CONDUCTOR SIDE)

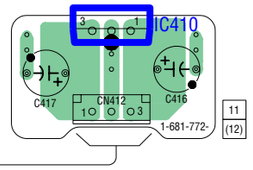

【POWER BOARD】(COMPONENT SIDE)

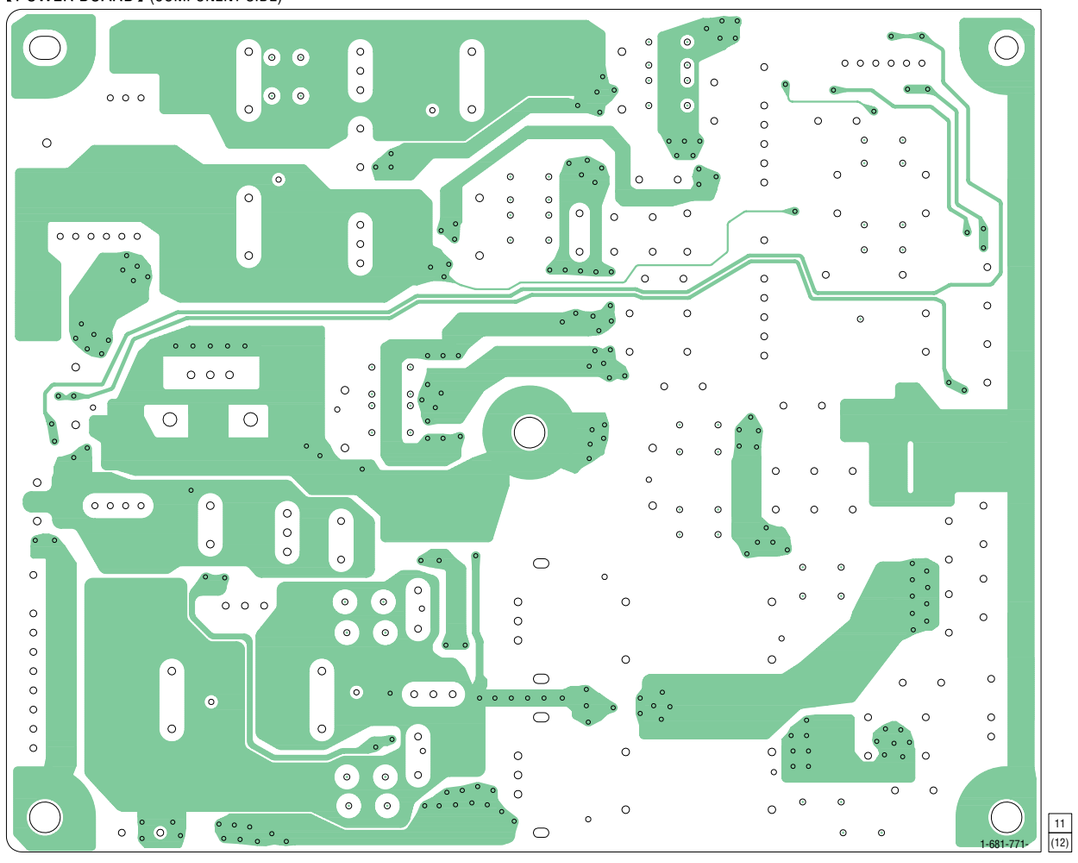

【POWER BOARD】(CONDUCTOR SIDE)

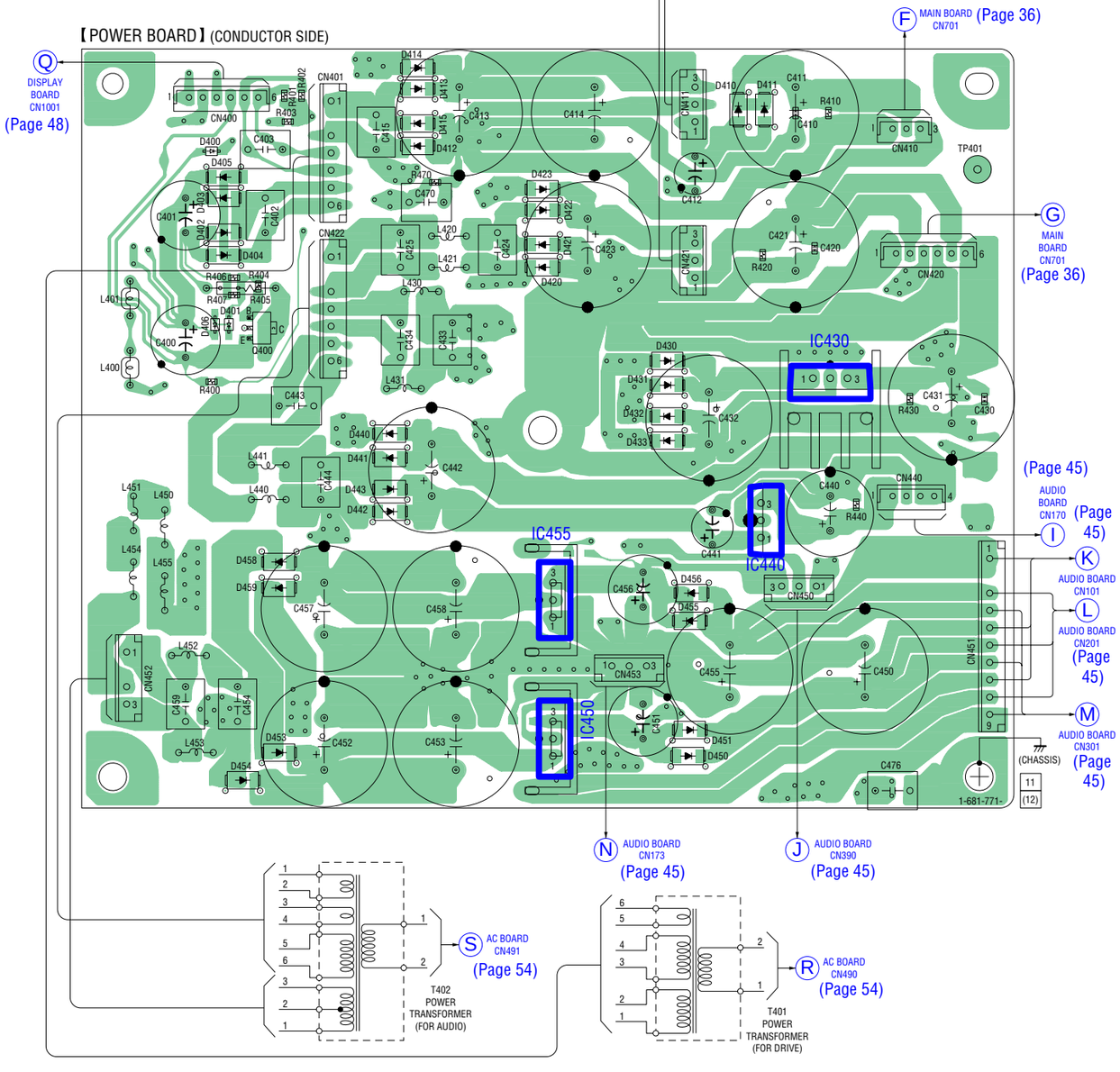

- **Semiconductor Location**

Ref. No.	Location	Ref. No.	Location	Ref. No.	Location	Ref. No.	Location
D400	C-8	D414	B-9	D441	D-9		
D401	D-8	D415	B-9	D442	E-9	IC410	A-12
D402	C-8	D420	C-9	D443	E-9	IC420	A-9
D403	C-8	D421	C-9	D450	F-10	IC430	D-11
D404	C-8	D422	C-9	D451	F-10	IC440	E-11
D405	C-8	D423	C-9	D453	F-8	IC450	F-9
D406	D-8	D430	D-10	D454	F-8	IC455	E-9
D410	B-11	D431	D-10	D455	E-10		
D411	B-11	D432	D-10	D456	E-10	Q400	D-8
D412	C-9	D433	D-10	D458	E-8		
D413	B-9	D440	D-9	D459	E-8		

5-27. SCHEMATIC DIAGRAM – IC-1/IC-2/POWER Boards –

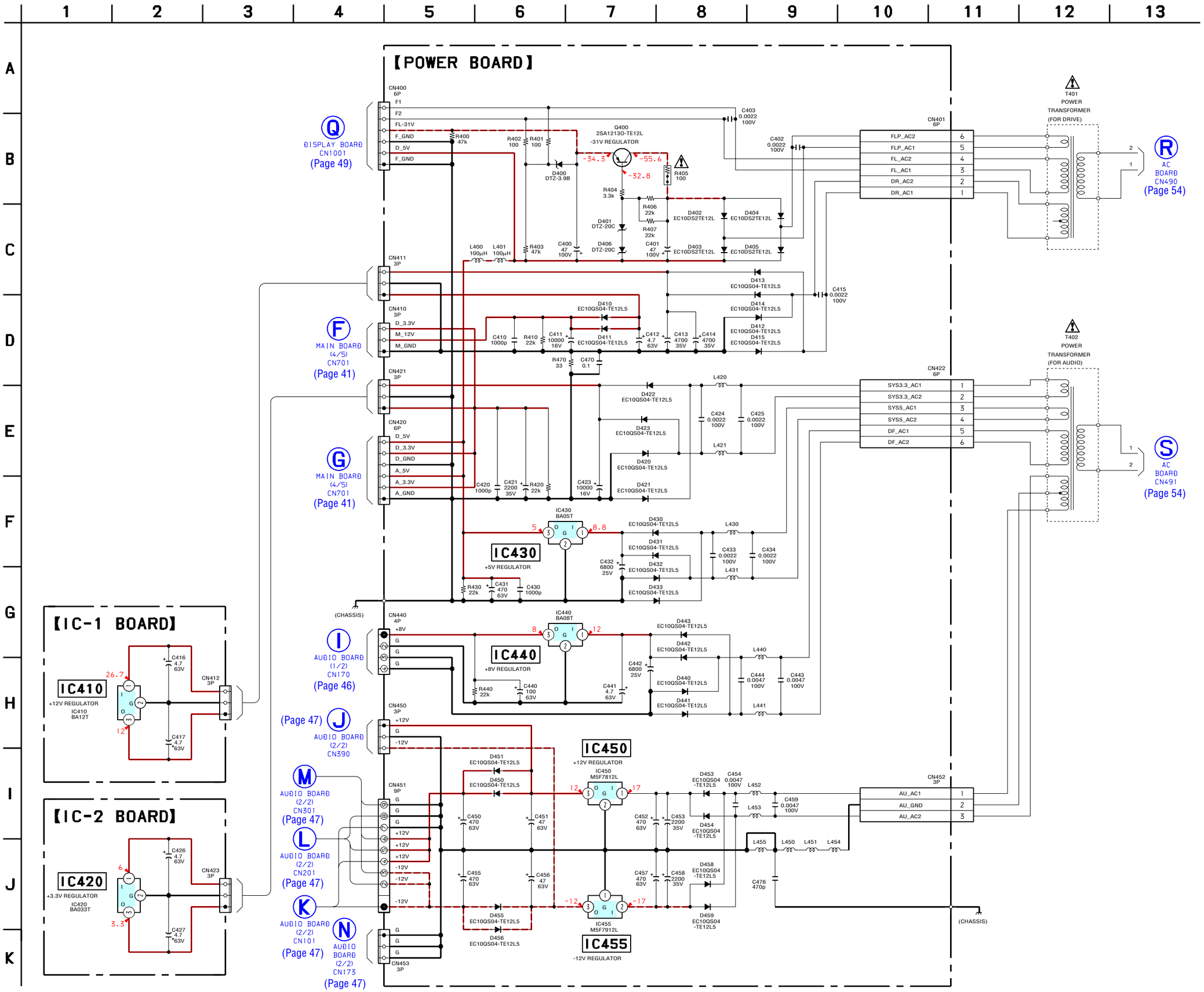

5-28. PRINTED WIRING BOARDS – AC/AC SW Boards –

• See page 33 for Circuit Boards Location.

【AC BOARD】(COMPONENT SIDE)

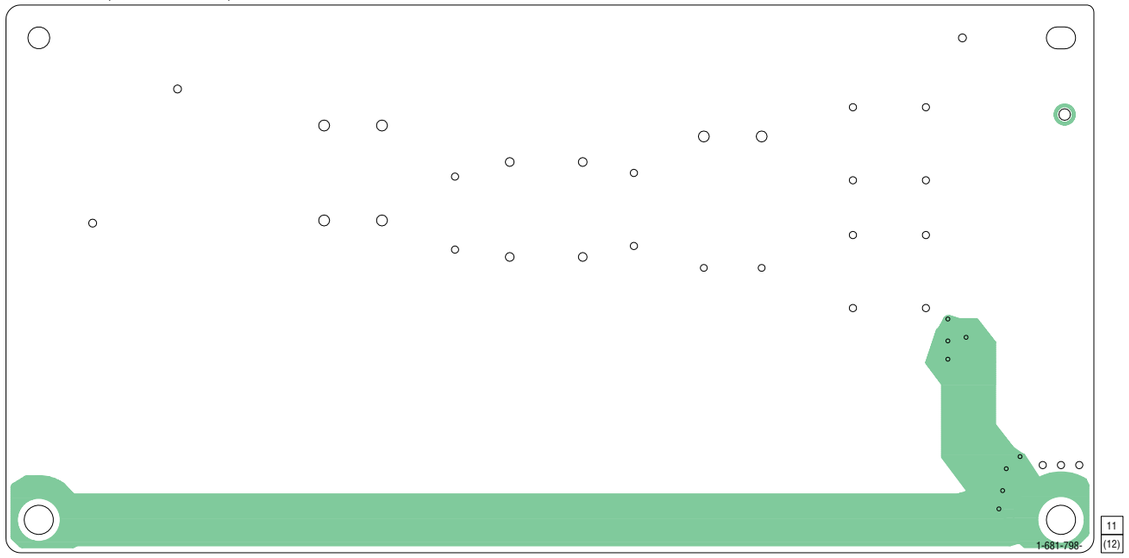

【AC BOARD】(CODUCTOR SIDE)

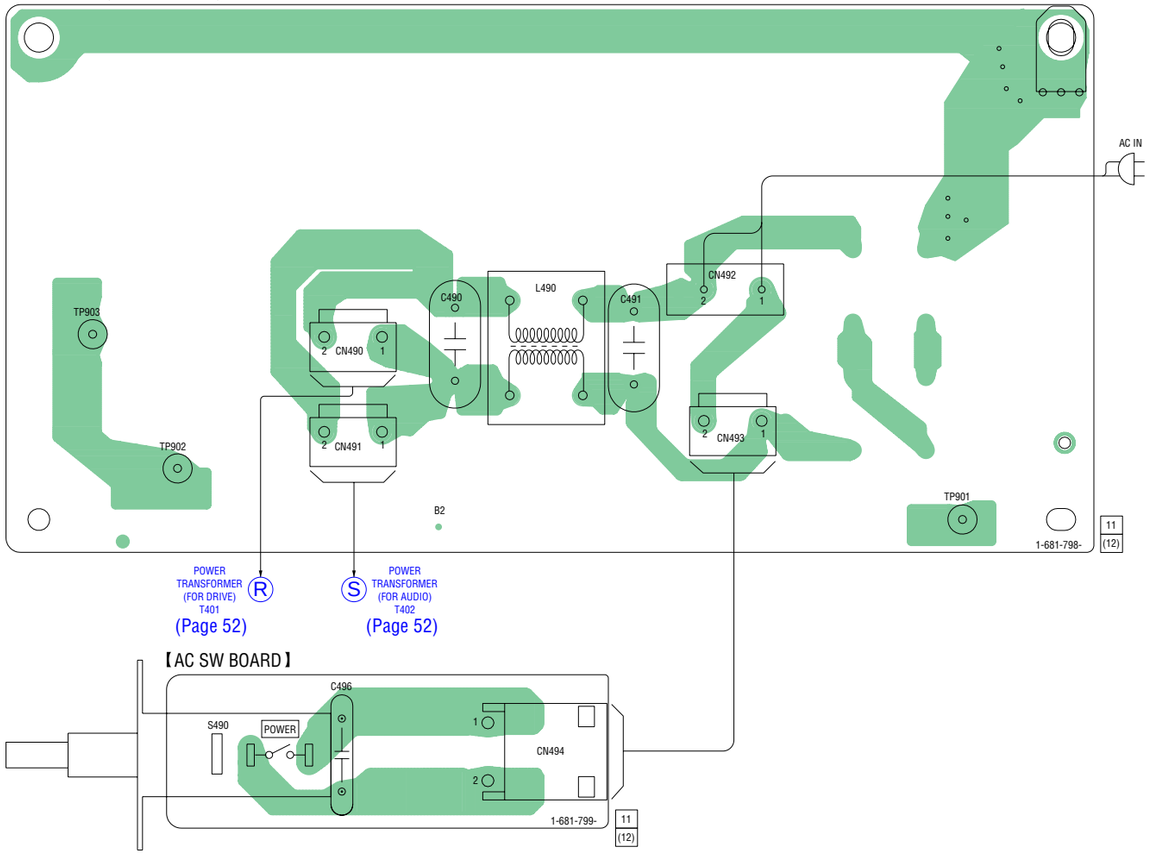

5-29. SCHEMATIC DIAGRAM – AC/AC SW Boards –

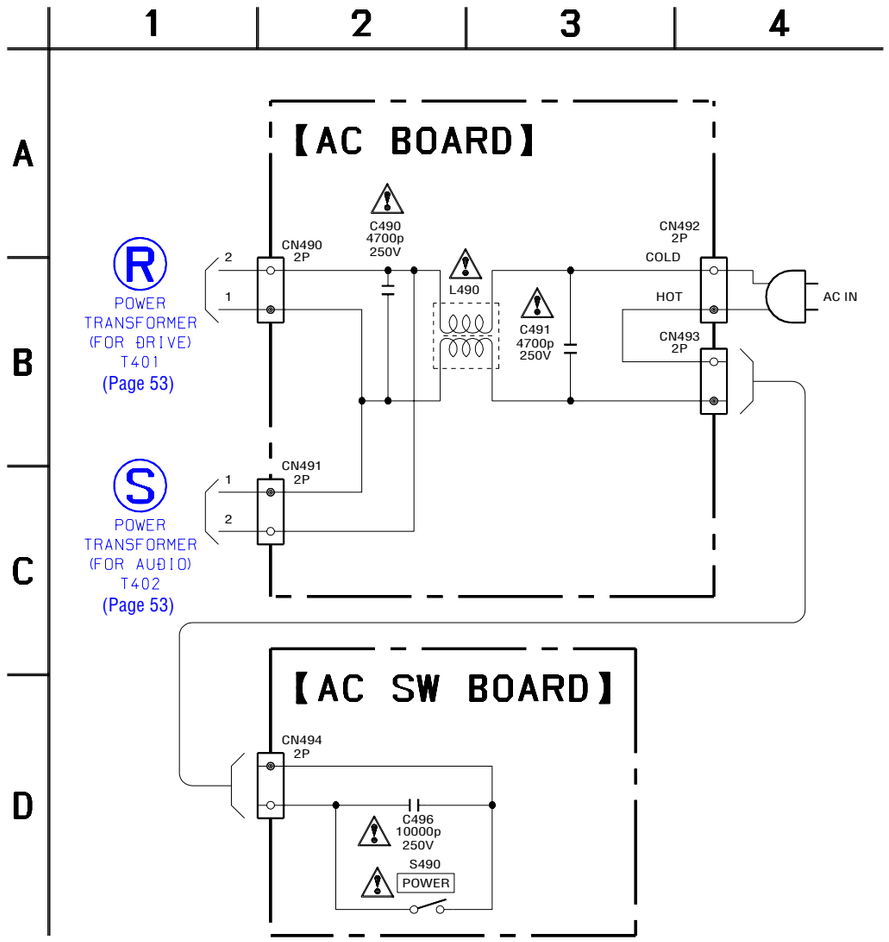

- **IC Block Diagrams**

– RF Board –

IC001 CXD1881R

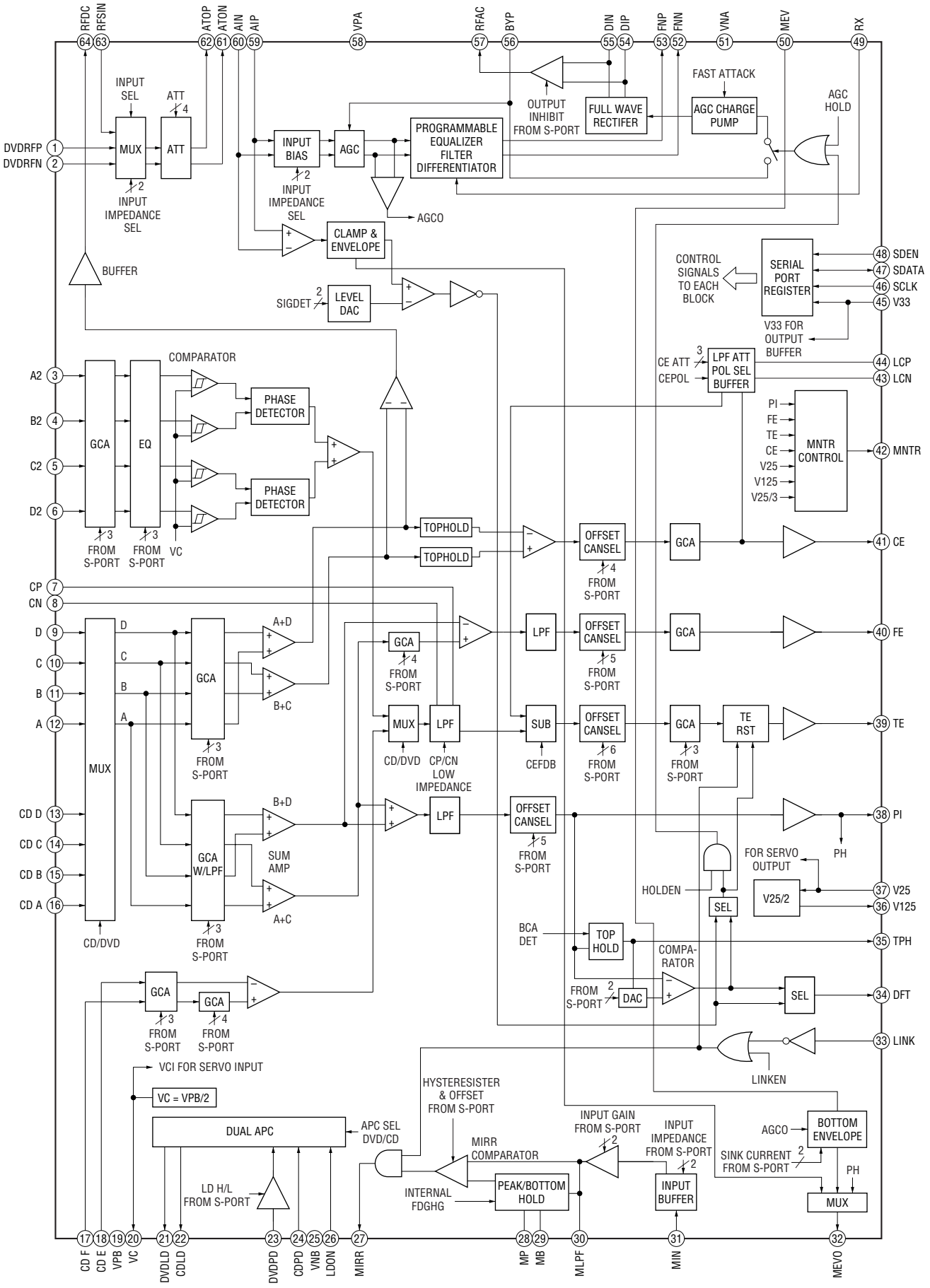

– MAIN Board –

IC509 CXD3008Q

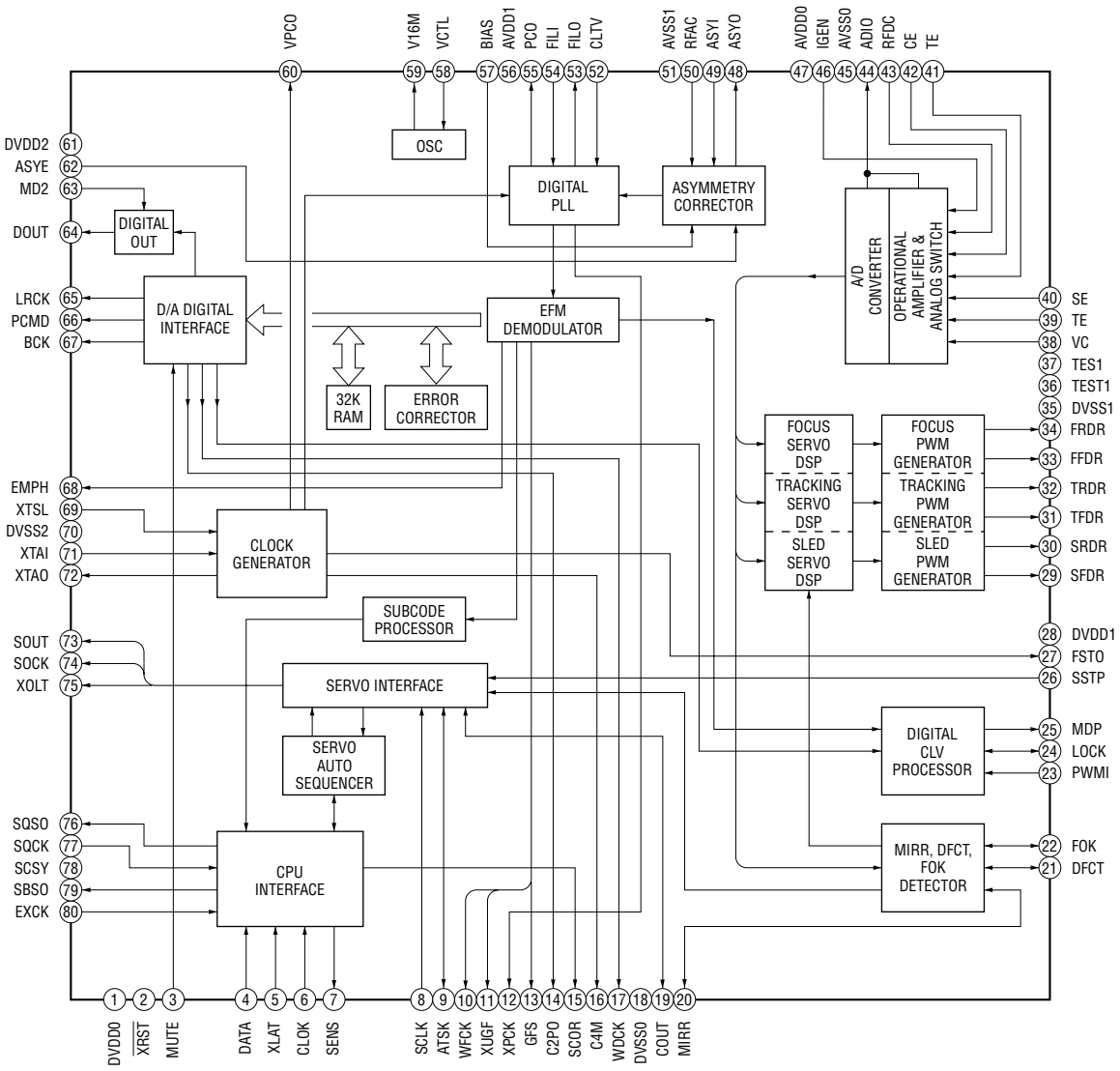

IC701 CXD1882R-1

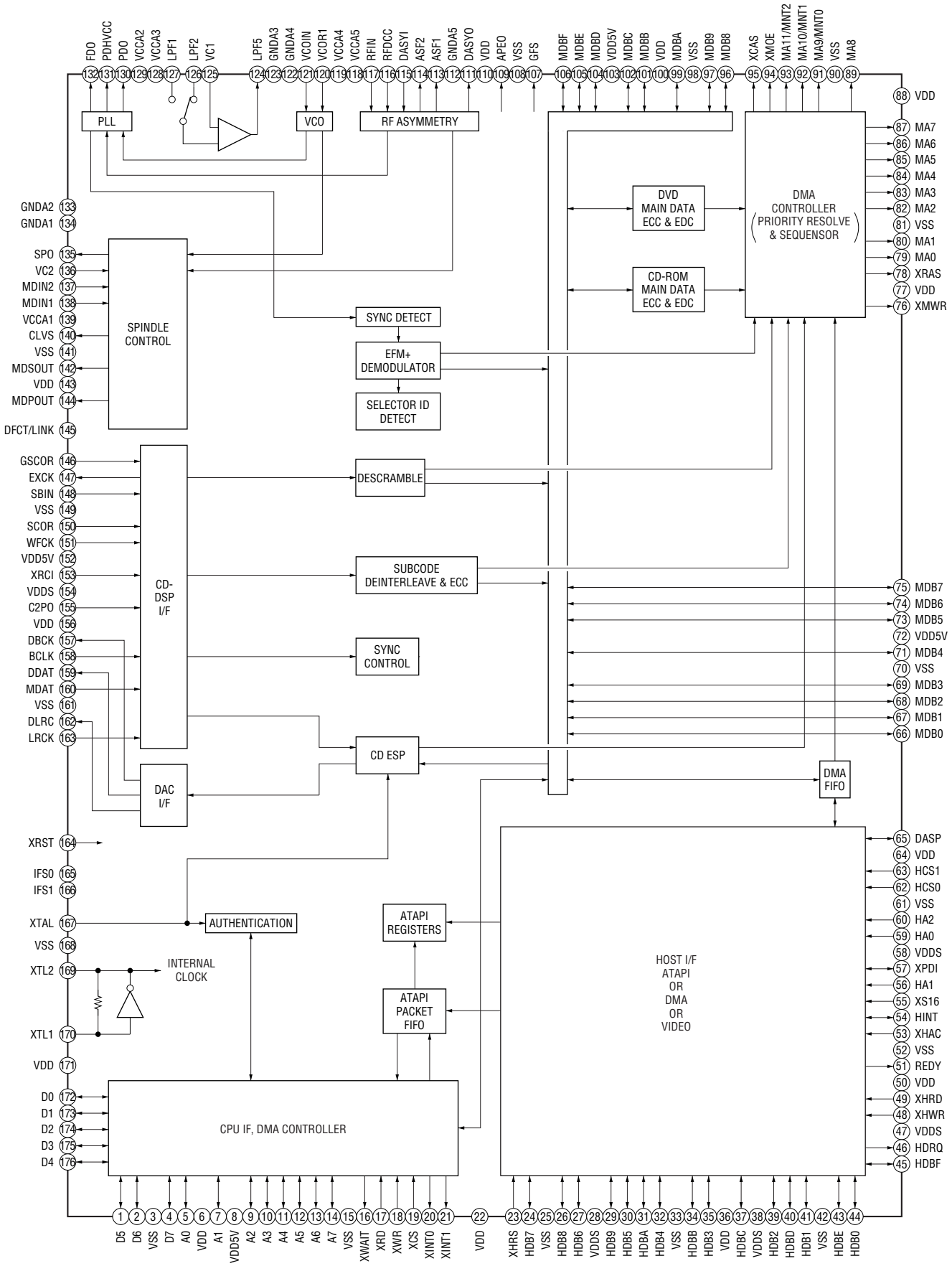

IC904 BU2500FV-E2

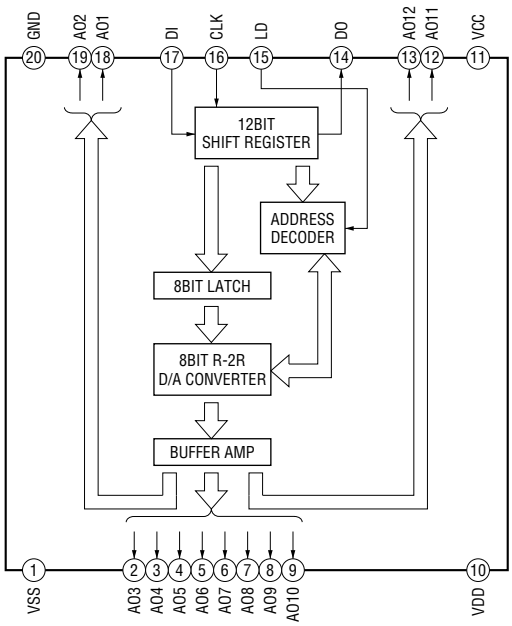

IC905 M51957BFP-600C

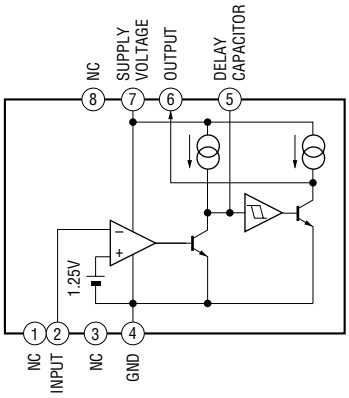

– AUDIO Board –

IC115, 215, 315 CXD9657N/2K

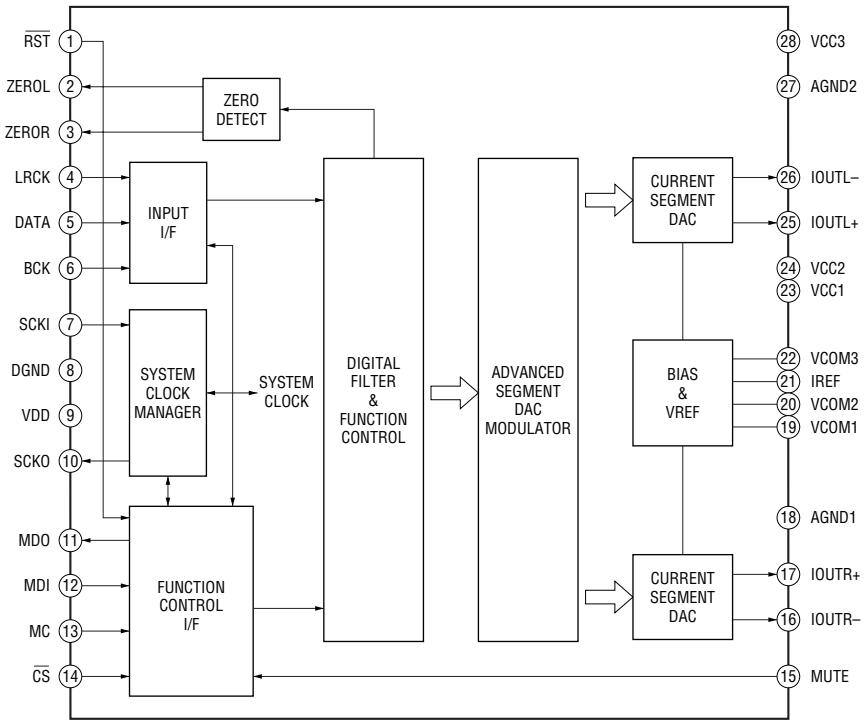

IC270 HD74LV157ATELL

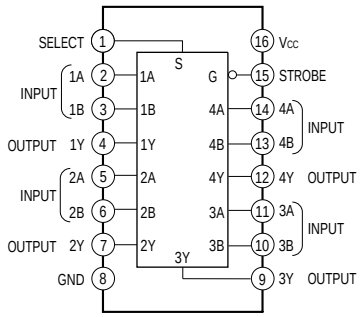

IC271 HD74LV161ATELL

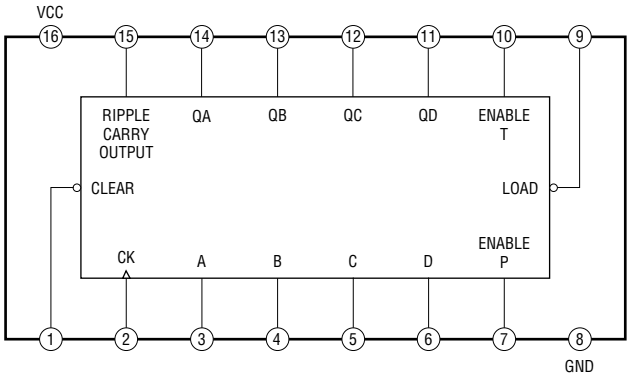

– DISPLAY Board –

IC1002 MSM9201-03GS-K

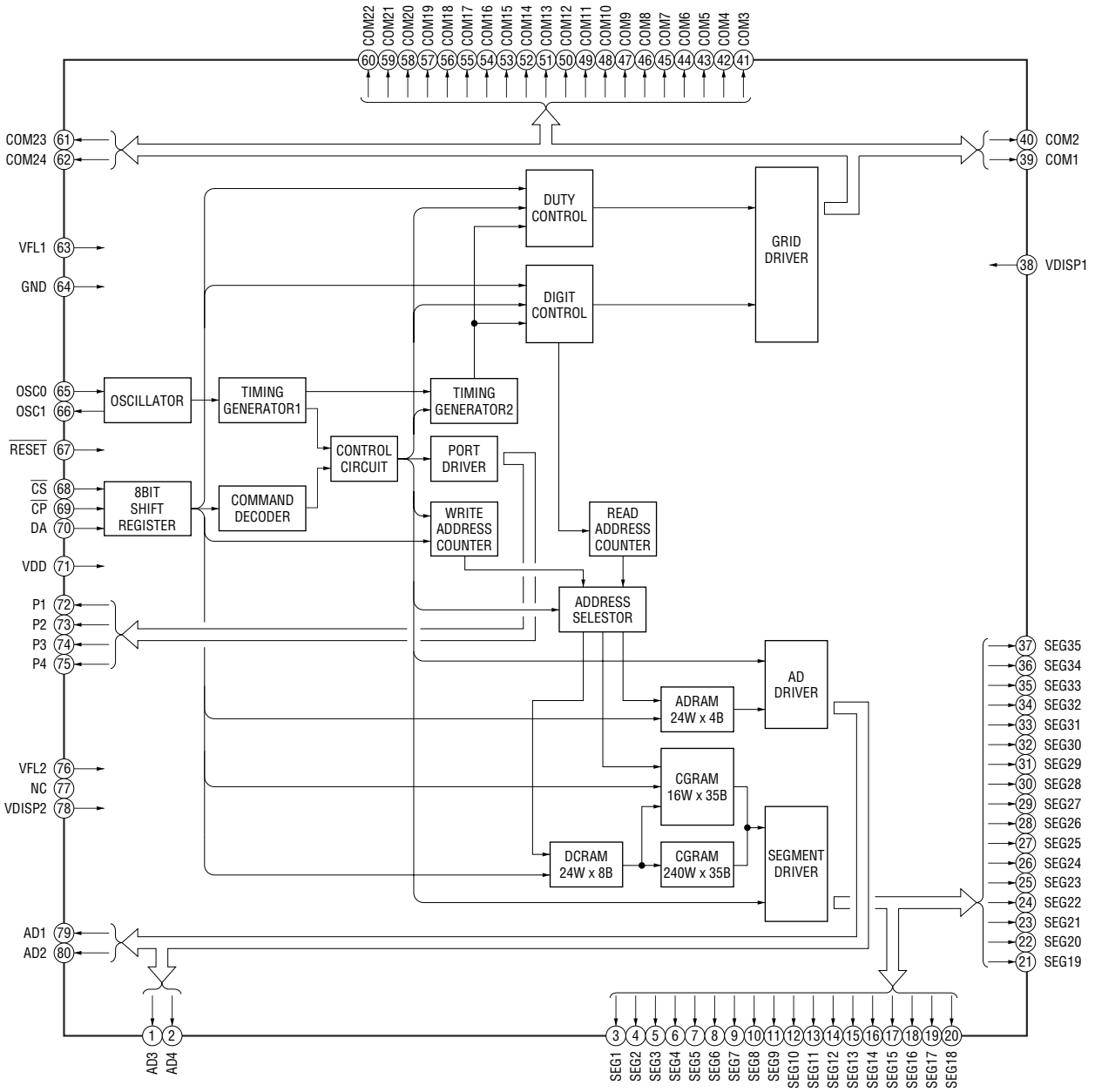

5-30. IC PIN FUNCTION DESCRIPTION

- **MAIN BOARD IC509 CXD3008Q**
  (DIGITAL SIGNAL PROCESSOR, DIGITAL SERVO PROCESSOR, DIGITAL FILTER, D/A CONVERTER)

Pin No.	Pin Name	I/O	Description
1	DVDD0	—	Power supply terminal (+3.3V) (digital system)
2	XRST	I	Reset signal input from the I/O expander (IC902) "L": reset
3	MUTE	I	Muting control signal input from the CPU (IC901) "H": muting
4	DATA	I	Serial data input from the CPU (IC901)
5	XLAT	I	Latch signal input from the CPU (IC901)
6	CLOK	I	Clock signal input from the CPU (IC901)
7	SENS	O	Internal status (SENSE) signal output to the CPU (IC901)
8	SCLK	I	Serial data transfer clock input from the CPU (IC901)
9	ATSK	I	Input pin for anti-shock (fixed at "L")
10	WFCK	O	Write frame clock signal output to the SACD decoder (IC701)
11	XUGF	O	XUGF signal output terminal Not used (open)
12	XPCK	O	XPCK signal output terminal Not used (open)
13	GFS	O	Guard frame sync signal output to the CPU (IC901)
14	C2PO	O	C2 pointer signal output to the SACD decoder (IC701)
15	SCOR	O	Subcode sync OR signal output to the SACD decoder (IC701) and the CPU (IC901)
16	C4M	O	4.2336 MHz clock signal output terminal Not used (open)
17	WDCK	O	Guard subcode sync OR signal output to the SACD decoder (IC701)
18	DVSS0	—	Ground terminal (digital system)
19	COUT	O	Numbers of track counted signal output to the CPU (IC901)
20	MIRR	O	Mirror signal output to the CPU (IC901)
21	DFCT	O	Defect signal output terminal
22	FOK	O	Focus OK signal output to the CPU (IC901)
23	PWMI	I	Not used (fixed at "L")
24	LOCK	O	GFS is sampled by 460 Hz "H" output when GFS is "H"
25	MDP	O	Spindle motor (M3) servo drive signal output to the SACD decoder (IC701)
26	SSTP	I	Detection signal input from limit switch (S1) The optical pick-up is inner position when "H"
27	FSTO	O	2/3 divider output terminal Not used (open)
28	DVDD1	—	Power supply terminal (+3.3V) (digital system)
29	SFDR	O	Sled servo drive PWM signal (+) output to the BA5983FP (IC502)
30	SRDR	O	Sled servo drive PWM signal (–) output to the BA5983FP (IC502)
31	TFDR	O	Tracking servo drive PWM signal (+) output to the BA5983FP (IC502)
32	TRDR	O	Tracking servo drive PWM signal (–) output to the BA5983FP (IC502)
33	FFDR	O	Focus servo drive PWM signal (+) output to the BA5983FP (IC502)
34	FRDR	O	Focus servo drive PWM signal (–) output to the BA5983FP (IC502)
35	DVSS1	—	Ground terminal (digital system)
36	TEST	I	Input terminal for the test (fixed at "L")
37	TES1	I	Input terminal for the test (fixed at "L")
38	VC	I	Middle point voltage (+1.65V) input from the NJM3403AV (IC004)
39	FE	I	Focus error signal input from the CXD1881R (IC001)
40	SE	I	Sled error signal input from the CXD1881R (IC001)
41	TE	I	Tracking error signal input from the CXD1881R (IC001)
42	CE	I	Chip enable signal input terminal
43	RFDC	I	Pull in signal input from the CXD1881R (IC001)
44	ADIO	O	Output terminal for the A/D converter Not used (open)

Pin No.	Pin Name	I/O	Description
45	AVSS0	—	Ground terminal (analog system)
46	IGEN	I	Stabilized current input for operational amplifiers
47	AVDD0	—	Power supply terminal (+3.3V) (analog system)
48	ASYO	O	Playback EFM full-swing output terminal
49	ASYI	I	Playback EFM asymmetry comparator voltage input terminal
50	RFAC	I	EFM RF signal (AC level) input from the CXD1881R (IC001)
51	AVSS1	—	Ground terminal (analog system)
52	CLTV	I	Internal VCO control voltage input of the EFM playback master PLL
53	FILO	O	Filter output for master clock of the playback EFM master PLL
54	FILI	I	Filter input for master clock of the playback EFM master PLL
55	PCO	O	Phase comparison output for master clock of the playback EFM master PLL
56	AVDD1	—	Power supply terminal (+3.3V) (analog system)
57	BIAS	I	Playback EFM asymmetry circuit constant current input terminal
58	VCTL	I	Control voltage input terminal for the variable pitch Not used (fixed at “L”)
59	V16M	O	16.9344 MHz clock signal output Not used (open)
60	VPCO	O	PLL charge pump output terminal for the variable pitch Not used (fixed at “L”)
61	DVDD2	—	Power supply terminal (+3.3V) (digital system)
62	ASYE	I	Playback EFM asymmetry circuit on/off selection signal input terminal Not used (fixed at “H”)
63	MD2	I	Digital out on/off control signal input from the CPU (IC901) “L”: digital out on, “H”: digital out off
64	DOUT	O	Digital audio signal output to the DIGITAL (CD) OUT OPTICAL (IC460)
65	LRCK	O	L/R sampling clock signal (44.1 kHz) output to the digital filter (IC115), SACD decoder (IC701), and CXD9647R (IC803)
66	PCMD	O	Serial data output to the digital filter (IC115), SACD decoder (IC701), and CXD9647R (IC803)
67	BCLK	O	Bit clock signal (2.8224 MHz) output to the digital filter (IC115), SACD decoder (IC701), and CXD9647R (IC803)
68	EMPH	O	Playback disc output terminal in emphasis mode Not used (open)
69	XTSL	I	Input terminal for the system clock frequency setting Fixed at “H” in this set
70	DVSS2	—	Ground terminal (digital system)
71	XTAI	I	System clock input terminal (33.86688 MHz)
72	XTAO	O	System clock output terminal (33.86688 MHz) Not used (open)
73	SOUT	O	Not used (open)
74	SOCK	O	Not used (open)
75	XOLT	I	Not used (open)
76	SQSO	O	Subcode Q data output to the CPU (IC901)
77	SQCK	I	Subcode Q data reading clock signal input from the CPU (IC901)
78	SCOR	O	Not used (open)
79	SBSO	O	Subcode serial data output to the SACD decoder (IC701)
80	EXCK	I	Subcode serial data reading clock signal input to the SACD decoder (IC701)

• **MAIN BOARD IC701 CXD1882R-1 (SACD DECODER)**

Pin No.	Pin Name	I/O	Description
1, 2	D5, D6	I/O	Two-way data bus with the CPU (IC901) and I/O expander (IC902)
3	VSS	—	Ground terminal (digital system)
4	D7	I/O	Two-way data bus with the CPU (IC901) and I/O expander (IC902)
5	A0	I	Address signal input from the CPU (IC901)
6	VDD	—	Power supply terminal (+3.3V) (digital system)
7	A1	I	Address signal input from the CPU (IC901)
8	VDD5V	—	Power supply terminal (+5V)
9 to 14	A2 to A7	I	Address signal input from the CPU (IC901)
15	VSS	—	Ground terminal (digital system)
16	XWAIT	O	Wait signal output terminal Not used (open)
17	XRD	I	Read strobe signal input from the CPU (IC901)
18	XWR	I	Write strobe signal input from the CPU (IC901)
19	XCS	I	Chip select signal input from the CPU (IC901)
20, 21	XINT0, XINT1	O	Interrupt signal output to the CPU (IC901)
22	VDD	—	Power supply terminal (+3.3V) (digital system)
23	XHRS	I	Not used (open)
24	HDB7	O	Stream data signal output to the DSD decoder (IC801)
25	VSS	—	Ground terminal (digital system)
26	HDB8	O	Error flag signal output to the DSD decoder (IC801)
27	HDB6	O	Stream data signal output to the DSD decoder (IC801)
28	VDDS	—	Power supply terminal (+5V) (digital system)
29	HDB9	O	Not used (open)
30	HDB5	O	Stream data signal output to the DSD decoder (IC801)
31	HDBA	O	Not used (open)
32	HDB4	O	Stream data signal output to the DSD decoder (IC801)
33	VSS	—	Ground terminal (digital system)
34	HDBB	O	Not used (open)
35	HDB3	O	Stream data signal output to the DSD decoder (IC801)
36	VDD	—	Power supply terminal (+3.3V) (digital system)
37	HDBC	O	Not used (open)
38	VDDS	—	Power supply terminal (+5V) (digital system)
39	HDB2	O	Stream data signal output to the DSD decoder (IC801)
40	HDBD	O	Not used (open)
41	HDB1	O	Stream data signal output to the DSD decoder (IC801)
42	VSS	—	Ground terminal (digital system)
43	HDBE	O	Not used (open)
44	HDB0	O	Stream data signal output to the DSD decoder (IC801)
45	HDBF	O	Not used (open)
46	XSAK	O	Serial data effect flag signal output to the DSD decoder (IC801)
47	VDDS	—	Power supply terminal (+5V) (digital system)
48	XDCK	O	Serial data transfer clock signal output to the DSD decoder (IC801)
49	XSHD	O	Header flag signal output to the DSD decoder (IC801)
50	VDD	—	Power supply terminal (+3.3V) (digital system)
51	REDY	O	Not used (pull up)
52	VSS	—	Ground terminal (digital system)
53	XHAC	I	Serial data request signal input from the DSD decoder (IC801)

Pin No.	Pin Name	I/O	Description
54	HINT	O	Not used (pull up)
55	XS16	O	Not used (pull up)
56	HA1	I	Not used (fixed at “H”)
57	XPDI	I/O	Not used (pull up)
58	VDDS	—	Power supply terminal (+5V) (digital system)
59, 60	HA0, HA2	I	Not used (fixed at “H”)
61	VSS	—	Ground terminal (digital system)
62, 63	HCS0, HCS1	I	Not used (open)
64	VDD	—	Power supply terminal (+3.3V) (digital system)
65	DASP	I/O	Not used (pull up)
66 to 69	MDB0 to MDB3	I/O	Two-way data bus with the D-RAM (IC706)
70	VSS	—	Ground terminal (digital system)
71	MDB4	I/O	Two-way data bus with the D-RAM (IC706)
72	VDD5V	—	Power supply terminal (+5V)
73 to 75	MDB5 to MDB7	I/O	Two-way data bus with the D-RAM (IC706)
76	XMWR	O	Write enable signal output to the D-RAM (IC706)
77	VDD	—	Power supply terminal (+3.3V) (digital system)
78	XRAS	O	Row address strobe signal output to the D-RAM (IC706)
79, 80	MA0, MA1	O	Address signal output to the D-RAM (IC706)
81	VSS	—	Ground terminal (digital system)
82 to 87	MA2 to MA7	O	Address signal output to the D-RAM (IC706)
88	VDD	—	Power supply terminal (+3.3V) (digital system)
89	MA8	O	Address signal output to the D-RAM (IC706)
90	VSS	—	Ground terminal (digital system)
91	MA9/MNT0	O	Address signal output to the D-RAM (IC706)
92	MA10/MNT1	O	RF data signal output terminal Not used (open)
93	MA11/MNT2	O	Operation clock signal output for PSP physical disc mark detection Monitor signal output to the CPU (IC901)
94	XMOE	O	Output enable signal output to the D-RAM (IC706)
95	XCAS	O	Column address strobe signal output to the D-RAM (IC706)
96, 97	MDB8, MDB9	I/O	Two-way data bus with the D-RAM (IC706)
98	VSS	—	Ground terminal (digital system)
99	MDBA	I/O	Two-way data bus with the D-RAM (IC706)
100	VDD	—	Power supply terminal (+3.3V) (digital system)
101, 102	MDBB, MDBC	I/O	Two-way data bus with the D-RAM (IC706)
103	VDD5V	—	Power supply terminal (+5V)
104 to 106	MDBD to MDBF	I/O	Two-way data bus with the D-RAM (IC706)
107	GFS	O	Guard frame sync signal output to the CPU (IC901)
108	VSS	—	Ground terminal (digital system)
109	APEO	O	Absolute phase error signal output
110	VDD	—	Power supply terminal (+3.3V) (digital system)
111	DASYO	O	RF binary signal output
112	GNDA5	—	Ground terminal (analog system)
113, 114	ASF1, AFS2	—	Filter connected terminal for selection the constant asymmetry compensation
115	DASYI	I	Analog signal input after integrated from the RF binary signal
116	RFDCC	I	Input terminal for adjusting DC cut high-pass filter for RF signal Not used (open)
117	RFIN	I	RF signal input from the CXD1881R (IC001)

Pin No.	Pin Name	I/O	Description
118, 119	VCCA5, VCCA4	—	Power supply terminal (+3.3V) (analog system)
120	VCOR1	—	VCO oscillating range setting resistor connected terminal
121	VCOIN	I	VCO input terminal
122, 123	GNDA4, GNDA3	—	Ground terminal (analog system)
124	LPF5	O	Signal output from the operation amplifier from PLL loop filter
125	VC1	I	Middle point voltage (+1.65V) input terminal
126, 127	LPF2, LPF1	I	Inverted signal input to the operation amplifier from PLL loop filter
128, 129	VCCA3, VCCA2	—	Power supply terminal (+3.3V) (analog system)
130	PDO	O	Signal output from the charge pump for phase comparator
131	PDHVCC	I	Middle point voltage input terminal for RF PLL
132	FDO	O	Signal output from the charge pump for frequency comparator
133, 134	GNDA2, GNDA1	—	Ground terminal (analog system)
135	SPO	O	Spindle motor (M3) control signal output to the BA5912AFP (IC512)
136	VC2	I	Middle point voltage (+1.65V) input terminal
137	MDIN2	I	Spindle motor (M3) servo drive signal input from the CXD3008Q (IC509)
138	MDIN1	I	MDP input terminal
139	VCCA1	—	Power supply terminal (+3.3V) (analog system)
140	CLVS	O	Control signal output for selection the spindle control filter at CLVS
141	VSS	—	Ground terminal (digital system)
142	MDSOUT	O	Frequency error output terminal of internal CLV circuit
143	VDD	—	Power supply terminal (+3.3V) (digital system)
144	MDPOUT	O	Phase error output terminal of internal CLV circuit
145	DEFECT	I	Defect signal input terminal Not used (fixed at “L”)
146	GSCOR	I	Guard subcode sync (S0+S1) detection signal input from the CXD3008Q (IC509)
147	EXCK	O	Subcode serial data reading clock signal output to the CXD3008Q (IC509)
148	SBIN	I	Subcode serial data input from the CXD3008Q (IC509)
149	VSS	—	Ground terminal (digital system)
150	SCOR	I	Subcode sync (S0+S1) detection signal input from the CXD3008Q (IC509)
151	WFCK	I	Write frame clock signal input from the CXD3008Q (IC509)
152	VDD5V	—	Power supply terminal (+5V)
153	XRCI	I	RAM overflow signal input terminal Not used (fixed at “L”)
154	VDDS	—	Power supply terminal (+5V) (digital system)
155	C2PO	I	C2 pointer signal input from the CXD3008Q (IC509)
156	VDD	—	Power supply terminal (+3.3V) (digital system)
157	DBCK	O	Bit clock signal (2.8224 MHz) output terminal Not used (open)
158	BCLK	I	Bit clock signal (2.8224 MHz) input from the CXD3008Q (IC509)
159	DDAT	O	PCM data output terminal Not used (open)
160	MDAT	I	Serial data input from the CXD3008Q (IC509)
161	VSS	—	Ground terminal (digital system)
162	DLRC	O	L/R sampling clock signal (44.1 kHz) output terminal Not used (open)
163	LRCK	I	L/R sampling clock signal (44.1 kHz) input from the CXD3008Q (IC509)
164	XRST	I	Reset signal input from the I/O expander (IC902) “L”: reset
165	IFS0	I	Interface select signal input terminal Fixed at “L” in this set
166	IFS1	I	Interface select signal input terminal Fixed at “H” in this set
167	XTAL	I	33.8688 MHz clock signal input terminal
168	VSS	—	Ground terminal (digital system)
169	XTA2	O	System clock output terminal (33.8688 MHz)

Pin No.	Pin Name	I/O	Description
170	XTA1	I	System clock input terminal (33.8688 MHz)
171	VDD	—	Power supply terminal (+3.3V) (digital system)
172 to 176	D0 to D4	I/O	Two-way data bus with the CPU (IC901) and I/O expander (IC902)

• **MAIN BOARD IC801 CXD2752R (DSD DECODER)**

Pin No.	Pin Name	I/O	Description
1	VSCA0	—	Ground terminal (for core)
2	XMSLAT	I	Serial data latch pulse signal input from the CPU (IC901)
3	MSCK	I	Serial data transfer clock signal input from the CPU (IC901)
4	MSDATI	I	Serial data input from the CPU (IC901)
5	VDCA0	—	Power supply terminal (+2.5V) (for core)
6	MSDATO	O	Serial data output to the CPU (IC901)
7	MSREADY	O	Ready signal output to the CPU (IC901) "L": ready
8	XMSDOE	O	Serial data output enable signal output terminal Not used (open)
9	XRST	I	Reset signal input from the I/O expander (IC902) "L": reset
10	SMUTE	I	Muting on/off signal input from the CPU (IC901) "H": muting on
11	MCKI	I	Master clock signal (33.8688 MHz) input terminal
12	VSIOA0	—	Ground terminal (for I/O)
13	EXCKO1	O	External clock 1 signal output terminal Not used (open)
14	EXCKO2	O	External clock 2 signal output terminal Not used (open)
15	LRCK	O	L/R sampling clock signal (44.1kHz) output terminal Not used (open)
16	FRAME	O	Frame signal output terminal Not used (open)
17	VDIOA0	—	Power supply terminal (+3.3V) (for I/O)
18 to 21	MNT0 to MNT3	O	Monitor signal output terminal Not used (open)
22 to 25	TESTO	O	Output terminal for the test (normally: open)
26	TCK	I	Clock signal input terminal for the test (normally: fixed at "L")
27	TDI	I	Input terminal for the test (normally: open)
28	VSCA1	—	Ground terminal (for core)
29	TDO	O	Output terminal for the test (normally: open)
30	TMS	I	Input terminal for the test (normally: open)
31	TRST	I	Reset terminal for the test (normally: fixed at "L")
32 to 34	TEST1 to TEST3	I	Input terminal for the test (normally: fixed at "L")
35	VDCA1	—	Power supply terminal (+2.5V) (for core)
36	TESTO	O	Output terminal for the test (normally: open)
37	XBIT	O	Monitor terminal relative to DST Not used (open)
38 to 41	SUPDT0 to SUPDT3	O	Supplementary data output terminal Not used (open)
42	VSIOA1	—	Ground terminal (for I/O)
43, 44	SUPDT4, SUPDT5	O	Supplementary data output terminal Not used (open)
45	VDIOA1	—	Power supply terminal (+3.3V) (for I/O)
46, 47	SUPDT6, SUPDT7	O	Supplementary data output terminal Not used (open)
48	XSUPAK	O	Supplementary data acknowledge signal output terminal Not used (open)
49	VSCA2	—	Ground terminal (for core)
50	TESTO	O	Output terminal for the test (normally: open)
51, 52	TESTI	I	Input terminal for the test (normally: fixed at "L")
53	TESTO	O	Output terminal for the test (normally: open)
54	VDCA2	—	Power supply terminal (+2.5V) (for core)
55, 56	TESTO	O	Output terminal for the test (normally: open)
57	BCKASL	I	Input/output selection signal input terminal of bit clock signal (2.8224 MHz) for DSD data output "L": input (slave), "H": output (master) (fixed at "L" in this set)
58	VSDSD0	—	Ground terminal (for DSD data output)
59	BCKAI	I	Bit clock signal (2.8224 MHz) input for DSD data output from the CXD9647R (IC803)

Pin No.	Pin Name	I/O	Description
60	BCKAO	O	Bit clock signal (2.8224 MHz) output terminal for DSD data output Not used (open)
61	PHREFI	I	Phase reference signal input for DSD output phase modulation from the CXD9647R (IC803)
62	PHREFO	O	Phase reference signal output terminal for DSD output phase modulation Not used (open)
63	ZDFL	O	Zero data (front L-ch) flag detection signal output terminal Not used (open)
64	DSAL	O	DSD data (front L-ch) output to the CXD9647R (IC803)
65	ZDFR	O	Zero data (front R-ch) flag detection signal output terminal Not used (open)
66	DSAR	O	DSD data (front R-ch) output to the CXD9647R (IC803)
67	VDDSD0	—	Power supply terminal (+3.3V) (For DSD data output)
68	ZDFC	O	Zero data (center) flag detection signal output terminal Not used (open)
69	DSAC	O	DSD data (center) output to the CXD9647R (IC803)
70	ZDFLFE	O	Zero data (sub woofer) flag detection signal output terminal Not used (open)
71	DSALFE	O	DSD data (sub woofer) output to the CXD9647R (IC803)
72	VSDSD1	—	Ground terminal (For DSD data output)
73	ZDFLS	O	Zero data (surround L-ch) flag detection signal output terminal Not used (open)
74	DSALS	O	DSD data (surround L-ch) output to the CXD9647R (IC803)
75	ZDFRS	O	Zero data (surround R-ch) flag detection signal output terminal Not used (open)
76	DSARS	O	DSD data (surround R-ch) output to the CXD9647R (IC803)
77	VDDSD1	—	Power supply terminal (+3.3V) (For DSD data output)
78, 79	TESTO	O	Output terminal for the test (normally: open)
80	VSCB0	—	Ground terminal (for core)
81, 82	TESTO	O	Output terminal for the test (normally: open)
83	VDCB0	—	Power supply terminal (+2.5V) (for core)
84, 85	TESTO	O	Output terminal for the test (normally: open)
86	VSIOB0	—	Ground terminal (for I/O)
87	TESTO	O	Output terminal for the test (normally: open)
88, 89	TESTI	I	Input terminal for the test (normally: fixed at “L”)
90	VDIO	—	Power supply terminal (+3.3V) (for I/O)
91 to 93	TESTO	O	Output terminal for the test (normally: open)
94	VSCB1	—	Ground terminal (for core)
95 to 97	TESTI	I	Input terminal for the test (normally: fixed at “L”)
98	TESTO	O	Output terminal for the test (normally: open)
99	VDCB1	—	Power supply terminal (+2.5V) (for core)
100 to 105	TESTI	I	Input terminal for the test (normally: fixed at “L”)
106	VSIOB1	—	Ground terminal (for I/O)
107 to 109	TESTI	I	Input terminal for the test (normally: fixed at “L”)
110	VDIOB1	—	Power supply terminal (+3.3V) (for I/O)
111 to 114	WAD0 to WAD3	I	External A/D data input terminal from the A/D converter for PSP physical disc mark detection Not used (open)
115	TESTI	I	Input terminal for disc inspection mode from the I/O expander (IC902)
116	VSCB2	—	Ground terminal (for core)
117 to 120	WAD4 to WAD7	I	External A/D data input terminal from the A/D converter for PSP physical disc mark detection Not used (open)
121	VDCB2	—	Power supply terminal (+2.5V) (for core)
122	TESTI	I	Input terminal for the test (normally: fixed at “L”)
123	WCK	I	Operation clock signal input for PSP physical disc mark detection from the CXD1882R (IC701)
124, 125	WAVDD0, 1	—	A/D power supply terminal (+2.5V) (for PSP physical disc mark detection)

Pin No.	Pin Name	I/O	Description
126	WARFI	I	Analog RF signal input for PSP physical disc mark detection from the CXD1881R (IC001)
127	WAVRB	I	A/D bottom reference terminal for PSP physical disc mark detection
128, 129	WAVSS1,0	—	A/D ground terminal (for PSP physical disc mark detection)
130	VSIOA2	—	Ground terminal (for I/O)
131 to 134	DQ7 to DQ4	I/O	Two-way data bus with the D-RAM (IC808)
135	VDIOA2	—	Power supply terminal (+3.3V) (for I/O)
136 to 139	DQ3 to DQ0	I/O	Two-way data bus with the D-RAM (IC808)
140	VSIOA3	—	Ground terminal (for I/O)
141	DCLK	O	Clock signal output to the D-RAM (IC808)
142	DCKE	O	Clock enable signal output to the D-RAM (IC808)
143	XWE	O	Write enable signal output to the D-RAM (IC808)
144	XCAS	O	Column address strobe signal output to the D-RAM (IC808)
145	XRAS	O	Row address strobe signal output to the D-RAM (IC808)
146	VDIOA3	—	Power supply terminal (+3.3V) (for I/O)
147	TESTO	O	Output terminal for the test (normally: open)
148, 149	A11, A10	O	Address signal output to the D-RAM (IC808)
150	VSCA3	—	Ground terminal (for core)
151, 152	A9, A8	O	Address signal output to the D-RAM (IC808)
153	VDCA3	—	Power supply terminal (+2.5V) (for core)
154 to 157	A7 to A4	O	Address signal output to the D-RAM (IC808)
158	VSIOA4	—	Ground terminal (for I/O)
159 to 162	A3 to A0	O	Address signal output to the D-RAM (IC808)
163	VDIOA4	—	Power supply terminal (+3.3V) (for I/O)
164	XSRQ	O	Serial data request signal output to the CXD1882R (IC701)
165	XSHD	I	Header flag signal input from the CXD1882R (IC701)
166	SDCK	I	Serial data transfer clock signal input from the CXD1882R (IC701)
167	XSAK	I	Serial data effect flag signal input from the CXD1882R (IC701)
168	SDEF	I	Error flag signal input from the CXD1882R (IC701)
169 to 176	SD0 to SD7	I	Stream data signal input from the CXD1882R (IC701)

• **MAIN BOARD IC803 CXD9647R (DSD DIGITAL SIGNAL PROCESSOR)**

Pin No.	Pin Name	I/O	Description
1	VDD	—	Power supply terminal (+3.3V) (digital system)
2	XMSDOE	O	Serial data output enable signal output terminal Not used (open)
3	MSREADY	I	Ready signal input from the CPU (IC901) “L”: ready
4	MSDATO	O	Serial data output to the CPU (IC901)
5	MSDATI	I	Serial data input from the CPU (IC901)
6	MSCK	I	Serial data transfer clock signal input from the CPU (IC901)
7	XMSLAT	I	Serial data latch pulse signal input from the I/O expander (IC902)
8	GND	—	Ground terminal (digital system)
9 to 16	TESTO	O	Output terminal for the test (normally: open)
17, 18	TESTI	I	Input terminal for the test (normally: fixed at “L”)
19	TESTO	O	Output terminal for the test (normally: open)
20	GND	—	Ground terminal (digital system)
21	TESTI	I	Input terminal for the test (normally: fixed at “L”)
22	GND	—	Ground terminal (digital system)
23	TESTI	I	Input terminal for the test (normally: fixed at “L”)
24	TESTO	O	Output terminal for the test (normally: open)
25	VDD	—	Power supply terminal (+3.3V) (digital system)
26	GND	—	Ground terminal (digital system)
27	TESTI	I	Input terminal for the test (normally: fixed at “L”)
28	FS128	O	Bit clock signal (2.8224 MHz) output for DSD data output to the DSD decoder (IC801)
29	TEST2	I	Input terminal for the test (normally: fixed at “L”)
30	FS64	O	Phase reference signal output for DSD output phase modulation to the DSD decoder (IC801)
31	GND	—	Ground terminal (digital system)
32	DSI1	I	DSD data (front L-ch) input from the DSD decoder (IC801)
33	GND	—	Ground terminal (digital system)
34	DSI2	I	DSD data (front R-ch) input from the DSD decoder (IC801)
35	VDD	—	Power supply terminal (+3.3V) (digital system)
36	DSI3	I	DSD data (center) input from the DSD decoder (IC801)
37	GND	—	Ground terminal (digital system)
38	DSI4	I	DSD data (sub woofer) input from the DSD decoder (IC801)
39	GND	—	Ground terminal (digital system)
40	DSI5	I	DSD data (surround L-ch) input from the DSD decoder (IC801)
41	VDD	—	Power supply terminal (+3.3V) (digital system)
42	DSI6	I	DSD data (surround R-ch) input from the DSD decoder (IC801)
43	GND	—	Ground terminal (digital system)
44 to 46	TESTO	O	Output terminal for the test (normally: open)
47	TESTI	I	Input terminal for the test (normally: fixed at “L”)
48	TESTO	O	Output terminal for the test (normally: open)
49	TESTI	I	Input terminal for the test (normally: fixed at “L”)
50	GND	—	Ground terminal (digital system)
51	VDD	—	Power supply terminal (+3.3V) (digital system)
52	TESTO	O	Output terminal for the test (normally: open)
53	GND	—	Ground terminal (digital system)
54	TESTO	O	Output terminal for the test (normally: open)
55	GND	—	Ground terminal (digital system)
56	DSAL	O	DSD data (front L-ch) output to the digital filter (IC115)

Pin No.	Pin Name	I/O	Description
57	VDD	—	Power supply terminal (+3.3V) (digital system)
58	DSAR	O	DSD data (front R-ch) output to the digital filter (IC115)
59	GND	—	Ground terminal (digital system)
60	DSALS	O	DSD data (surround L-ch) output to the digital filter (IC215)
61	GND	—	Ground terminal (digital system)
62	DSARS	O	DSD data (surround R-ch) output to the digital filter (IC215)
63	VDD	—	Power supply terminal (+3.3V) (digital system)
64	DSAC	O	DSD data (center) output to the digital filter (IC315)
65	GND	—	Ground terminal (digital system)
66	DSASW	O	DSD data (sub woofer) output to the digital filter (IC315)
67	GND	—	Ground terminal (digital system)
68	PHREFI	I	Phase reference signal input terminal for DSD output phase modulation
69	PHREFO	O	Phase reference signal output terminal for DSD output phase modulation
70	BCKASL	I	Input/output selection signal input terminal of bit clock signal (2.8224 MHz) for DSD data output “L”: input (slave), “H”: output (master) (fixed at “L” in this set)
71	BCKAO	O	Bit clock signal (2.8224 MHz) output terminal for DSD data output Not used (open)
72	BCKAI	I	Bit clock signal (2.8224 MHz) input terminal for DSD data output Not used
73, 74	TESTO	O	Output terminal for the test Not used
75	VDD	—	Power supply terminal (+3.3V) (digital system)
76	GND	—	Ground terminal (digital system)
77	TESTI	I	Input terminal for the test Not used
78	A2	I	Clock signal input terminal
79	XSBSL2	I	HD mode selection signal input from the I/O expander (IC902)
80	TESTI	I	Input terminal for the test Not used
81	A1	I	Clock signal input terminal
82	XABSL1	I	HD mode selection signal input from the I/O expander (IC902)
83, 84	TESTO	O	Output terminal for the test Not used
85	DVCKI	I	11.2896 MHz clock signal input terminal
86	TESTI	I	Input terminal for the test Not used
87	GND	—	Ground terminal (digital system)
88	MCKI	I	Master clock signal (33.8688 MHz) input terminal
89	VDD	—	Power supply terminal (+3.3V) (digital system)
90	LRCK	O	L/R sampling clock signal (44.1kHz) output to the digital filter (IC115)
91	CDDATAR	O	Serial data output terminal Not used (open)
92	CDDATAL	O	Serial data output to the digital filter (IC115)
93	CDDATASL	I	CD mode selection signal input from the I/O expander (IC902)
94	BCKI	I	Bit clock signal (2.8224 MHz) input from the CXD3008Q (IC509)
95	LRCKI	I	L/R sampling clock signal (44.1 kHz) input from the CXD3008Q (IC509)
96	CDDATAI	I	Serial data input from the CXD3008Q (IC509)
97	TESTI	I	Input terminal for the test (normally: fixed at “L”)
98	SMUTE	I	Muting on/off signal input from the CPU (IC901) “H”: muting on
99	XRST	I	Reset signal input from the I/O expander (IC902) “L”: reset
100	GND	—	Ground terminal (digital system)

• **MAIN BOARD IC901 CXP973F064R-1 (CPU)**

Pin No.	Pin Name	I/O	Description
1	MODE DF	O	SACD/CD mode selection signal output to the data selector (IC270) “L”: CD mode, “H”: SACD mode
2	AMUTE	O	Muting on/off signal output to the analog line circuit “L”: muting on
3	DOCTRL	O	Digital out on/off control signal output to the CXD3008Q (IC509) “L”: digital out off, “H”: digital out on
4	LAT DAC	O	Serial data latch pulse signal output to the D/A converter (IC904)
5	DATA DAC	O	Serial data output to the D/A converter (IC904)
6	CLK DAC	O	Serial data transfer clock signal output to the D/A converter (IC904)
7	FCS JMP 4	O	Focus jump 1 signal output to the BA5983FP (IC502)
8	FCS JMP 3	O	Focus jump 2 signal output to the BA5983FP (IC502)
9	SENS CD	I	Internal status (SENSE) signal input from the CXD3008Q (IC509)
10	XCS2	O	Chip select signal output to the D-RAM Not used (pull up)
11	XCS IO	O	Chip select signal output to the I/O expander (IC902)
12	XCS DVD	O	Chip select signal output to the CXD1882R (IC701)
13	VSS	—	Ground terminal (digital system)
14 to 21	D0 to D7	I/O	Two-way data bus with the CXD1882R (IC701) and I/O expander (IC902)
22	INT0 DVD	I	Interrupt signal input from the CXD1882R (IC701)
23	INT1 DVD	I	Interrupt signal input from the CXD1882R (IC701)
24	T SENS	I	Disc tray status detection signal input from the table sensor Not used
25	MON DVD	I	Monitor signal input terminal Not used (open)
26	DATA CD	O	Serial data output to the CXD3008Q (IC509)
27	XLAT CD	O	Serial data latch pulse signal output to the CXD3008Q (IC509)
28	A1IN	I	Sircs remote control signal input of the CONTROL A1II Not used
29	COUT CD	I	Numbers of track counted signal input from the CXD3008Q (IC509)
30	IN SW	I	Loading in switch (S001) input terminal “L”: loading in
31	OUT SW	I	Loading out switch (S002) input terminal “L”: loading out
32	MIRR	I	Mirror signal input from the CXD3008Q (IC509)
33	SUBQ	I	Subcode Q data input from the CXD3008Q (IC509)
34	SCOR	I	Subcode sync (S0+S1) detection signal input from the CXD3008Q (IC509)
35	SQCLK	O	Subcode Q data reading clock signal output to the CXD3008Q (IC509)
36	NC	—	Not used (open)
37	CLOK CD	O	Serial data transfer clock signal output to the CXD3008Q (IC509)
38	XRST	I	System reset signal input from the reset signal generator (IC905) “L”: reset For several hundreds msec. after the power supply rises, “L” is input, then it changes to “H”
39	VSS	—	Ground terminal (digital system)
40	XTAL	I	System clock input terminal (20 MHz)
41	EXTAL	O	System clock output terminal (20 MHz)
42	VDD	—	Power supply terminal (+3.3V) (digital system)
43	LD ON	O	Laser diode on/off control signal output to the CXD1881R (IC001) “L”: laser diode off, “H”: laser diode on
44	XDIS IO	O	Reset signal output to the I/O expander (IC902) “L”: reset
45	MUTE DSD	O	Muting on/off signal output to the DSD decoder (IC801) and CXD9647R (IC803) “H”: muting on
46	XMSLAT	O	Serial data latch pulse signal output to the DSD decoder (IC801)
47	READY DSD	I	Ready signal input from the DSD decoder (IC801) and CXD9647R (IC803) “L”: ready
48	SDIN DSD	I	Serial data input from the DSD decoder (IC801) and CXD9647R (IC803)

Pin No.	Pin Name	I/O	Description
49	SOUT DSD	O	Serial data output to the DSD decoder (IC801) and CXD9647R (IC803)
50	SCK DSD	O	Serial data transfer clock signal output to the DSD decoder (IC801) and CXD9647R (IC803)
51	BUSY DP	I	Busy signal input to the display controller (IC1001)
52	SD IN	I	Serial data input to the display controller (IC1001)
53	SDOUT	O	Serial data output to the display controller (IC1001)
54	SLK	O	Serial data transfer clock signal output to the display controller (IC1001)
55	VSS	—	Ground terminal (digital system)
56	REQ	O	Request signal output to the display controller (IC1001)
57	FCS BST	O	Focus boost signal output terminal Not used (open)
58	GFS DVD	I	Guard frame sync signal input from the CXD1882R (IC701)
59	MUTE CD	O	Muting on/off control signal output to the CXD3008Q (IC509) “L”: muting on
60	MUTE 2D	O	Muting on/off control signal output to the BA5983FP (IC502) “L”: muting on
61	MUTE LOAD	O	Muting on/off control signal output to the BA5912AFP (IC512) “L”: muting on
62	FG	I	Frequency generator signal input from the BA5983FP (IC502)
63	SP ON	o	Muting on/off control signal output to the BA5912AFP (IC512) “L”: muting on
64	JIT	I	Jitter signal input terminal
65	TE	I	Tracking error signal input from the CXD1881R (IC001)
66	PI	I	Pull in signal input from the CXD1881R (IC001)
67	FE	I	Focus error signal input from the CXD1881R (IC001)
68	AVSS	—	Ground terminal (for A/D converter)
69	AVREF	I	Reference voltage input terminal (for A/D converter)
70	AVDD	—	Power supply terminal (+3.3V) (for A/D converter)
71	GFS CD	I	Guard frame sync signal input from the CXD3008Q (IC509)
72	SCLK CD	O	SENSE serial data reading clock signal output to the CXD3008Q (IC509)
73	NC	—	Not used (open)
74	FOK CD	I	Focus OK signal input from the CXD3068Q (IC509)
75	LOCK CD	I	GFS is sampled by 460 Hz “H” input when GFS is “H”
76	RF AD CE	O	Chip enable signal output to the A/D converter Not used
77	SP DW	O	Serial data transfer clock signal output to the CXD1881R (IC001)
78	EEPSIO	I/O	Two-way data bus with the EEPROM (IC903)
79	EEPSCL	O	Clock signal output to the EEPROM (IC903)
80	RXD	I	Serial data input from the RS-232C (for check)
81	TXD	O	Serial data output to the RS-232C (for check)
82	SDCLK RF	O	Clock signal output to the CXD1881R (IC001)
83	SDATA RF	I/O	Two-way data bus with the CXD1881R (IC001)
84	XWR	O	Write strobe signal output to the CXD1882R (IC701) and I/O expander (IC902)
85	XRD	O	Read strobe signal output to the CXD1882R (IC701) and I/O expander (IC902)
86	PWE	I	Control signal input from the RS-232C (for check)
87	VDD	—	Power supply terminal (+3.3V) (digital system)
88	VSS	—	Ground terminal (digital system)
89 to 91	A0 to A2	O	Address signal output to the CXD1882R (IC701) and I/O expander (IC902)
92 to 96	A3 to A7	O	Address signal output to the CXD1882R (IC701)
97	INIT DF	O	Initial signal output to the digital filter (IC115, IC215, IC315)
98	LATCH DF	O	Latch signal output to the digital filter (IC115, IC215, IC315)
99	SHIFT DF	O	Shift signal output to the digital filter (IC115, IC215, IC315)
100	SCDATA DF	O	Serial data output to the digital filter (IC115, IC215, IC315)

• **MAIN BOARD IC902 CXD1095BR (I/O EXPANDER)**

Pin No.	Pin Name	I/O	Description
1	LIM SW	I	Detection signal input from limit in switch (S1) The optical pick-up is inner position when “H”
2	WISE	I	Direction of rotation signal input terminal Not used (open)
3	F COML	I	Focus jump L signal input terminal Not used (open)
4	SPCNTL1	O	Spindle motor control signal 1 input terminal Not used (open)
5	SPCNTL0	I	Spindle motor control signal 2 input terminal Not used (open)
6	TBLL	O	Table motor drive signal (counterclockwise direction) output terminal Not used
7	TBLR	O	Table motor drive signal (clockwise direction) output terminal Not used
8	VSS	—	Ground terminal (digital system)
9	$\overline{\text{REM CODE}}$	—	Not used (open)
10	D SENS	I	Disc status detection signal input from the disc sensor Not used
11, 12	S1, S2	I	Disc tray position detection signal input from the table address detect Not used
13	LOAD OUT	O	Loading motor drive signal (loading out direction) output to the BA5912AFP (IC512)
14	SDCNTL	—	Not used (open)
15	LOAD IN	O	Loading motor drive signal (loading in direction) output to the BA5912AFP (IC512)
16	A1OUT	O	Sircs remote control signal output of the CONTROL A1II Not used
17	NC	—	Not used (open)
18	RST DSD	O	Reset signal output to the DSD decoder (IC801) and CXD9647R (IC803) “L”: reset
19	RST DP	O	Reset signal output to the display controller (IC1001) “L”: reset
20	RST DVD	O	Reset signal output to the CXD1882R (IC701) “L”: reset
21	RST CD	O	Reset signal output to the CXD3008Q (IC509) “L”: reset
22	VMOD	O	Power on/off control signal output for modulation circuit on optical pick-up block “L”: power off, “H”: power on
23	VSS	—	Ground terminal (digital system)
24	VDD	—	Power supply terminal (+3.3V) (digital system)
25	MULTI	O	Multi/2ch selection signal output teminal “L”: 2ch, “H”: multi
26	SDEN	O	Serial data enable signal output to CXD1881R (IC001)
27	ISBTEST	O	Output terminal for disc inspection mode to DSD decoder (IC801)
28 to 30	D0 to D2	I/O	Two-way data bus with the CXD1882R (IC701) and CPU (IC901)
31, 32	NC	—	Not used (open)
33 to 37	D3 to D7	I/O	Two-way data bus with the CXD1882R (IC701) and CPU (IC901)
38	XCLR	I	Clear signal input terminal Not used (fixed at “H”)
39	XDIS	I	Reset signal input from the CPU (IC901) “L”: reset
40	VSS	—	Ground terminal (digital system)
41	XWR	I	Write strobe signal input from the CPU (IC901)
42	XRD	I	Read strobe signal input from the CPU (IC901)
43	XCS	I	Chip select signal input from the CPU (IC901)
44 to 46	A0 to A2	I	Address signal input from the CPU (IC901)
47	SWGUP	O	Sub woofer gain up control signal output terminal “H”: gain up
48	PE1	—	Not used (open)
49	NC	—	Not used (open)
50	TRKFIL	—	Not used (open)
51	XDAC333	O	CD mode selection signal output to the CXD9647R (IC803)
52	DFCTEN	O	Defect signal output terminal Not used
53	XZLAT	O	Serial data latch pulse signal output to the CXD9647R (IC803)

Pin No.	Pin Name	I/O	Description
54	MRSEL1	O	SACD/CD mode selection signal output terminal Not used
55	VSS	—	Ground terminal (digital system)
56	VDD	—	Power supply terminal (+3.3V) (digital system)
57	AGING ERR	O	Not used (open)
58	PA4	—	Not used (open)
59	OUT SW	I	Disc tray open/close detection switch input terminal “L”: disc tray open, “H”: disc trat close Not used
60, 61	PA6, PA7	—	Not used (open)
62	F COMH	I	Focus jump H signal input terminal
63, 64	NC	—	Not used (open)

SECTION 6
EXPLODED VIEWS

NOTE:
- -XX and -X mean standardized parts, so they may have some difference from the original one.
- Color Indication of Appearance Parts
  Example:
  KNOB, BALANCE (WHITE) . . . (RED)
  ↑ Parts Color ↑ Cabinet's Color
- Items marked "*" are not stocked since they are seldom required for routine service. Some delay should be anticipated when ordering these items.
- The mechanical parts with no reference number in the exploded views are not supplied.
- Hardware (# mark) list and accessories and packing materials are given in the last of the electrical parts list.

The components identified by mark ⚠ or dotted line with mark ⚠ are critical for safety.
Replace only with part number specified.

6-1. CASE SECTION

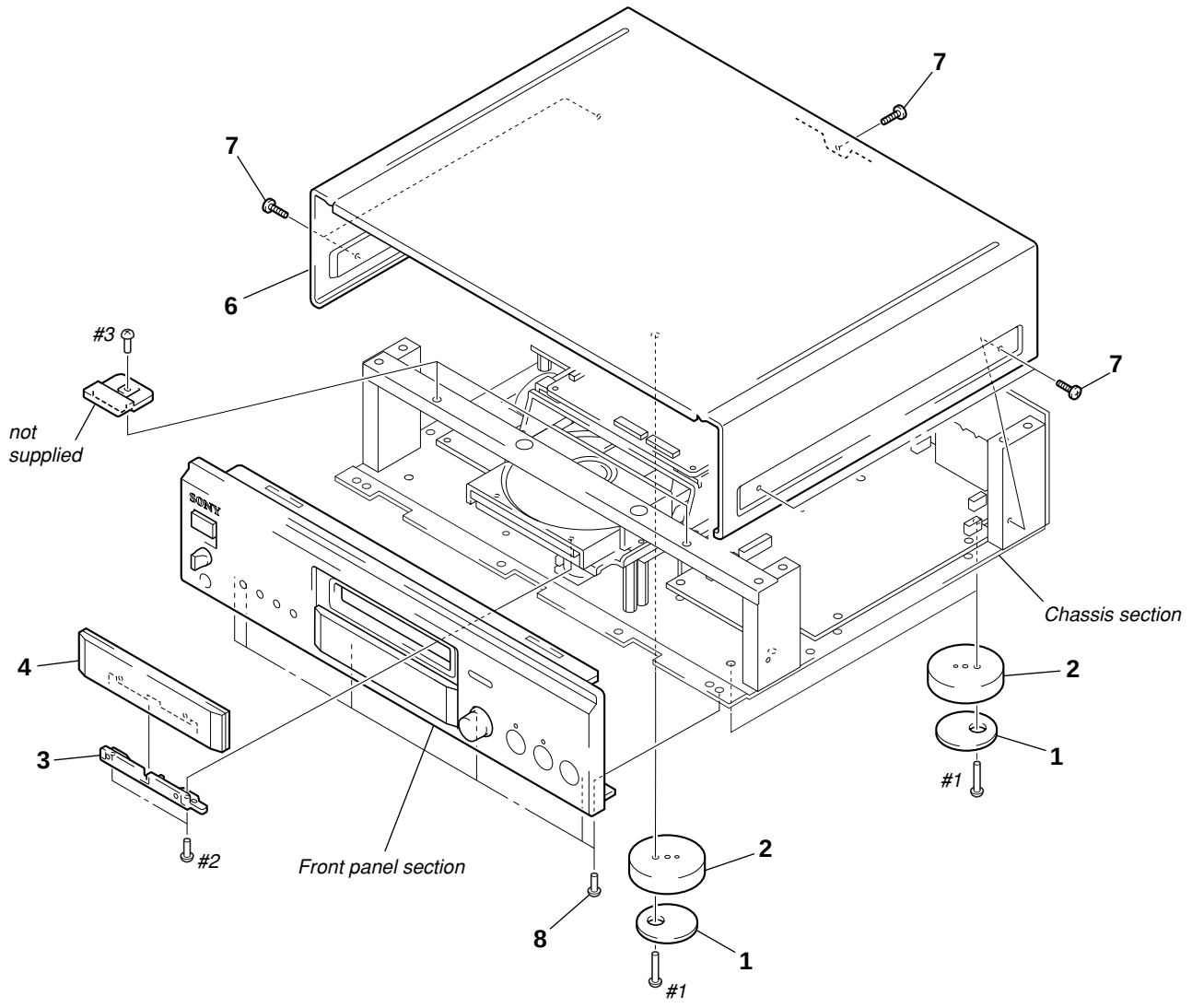

Ref. No.	Part No.	Description	Remark	Ref. No.	Part No.	Description	Remark
1	4-970-124-01	CUSHION (F50180S)		6	4-220-301-11	CASE (BLACK)	
2	4-970-123-01	FOOT (F50180S)		7	4-227-843-01	SCREW (TP), FLAT HEAD (BLACK)	
3	4-230-613-01	BRACKET (LOADING PANEL)		7	4-227-843-11	SCREW (TP), FLAT HEAD (GOLD)	
4	X-4953-186-1	PANEL ASSY, LOADING (GOLD)		8	3-703-685-01	SCREW (+BV 3X8) (GOLD)	
4	X-4953-187-1	PANEL ASSY, LOADING (BLACK)		8	3-703-685-21	SCREW (+BV 3X8) (BLACK)	
6	4-220-301-01	CASE (GOLD)					

6-2. FRONT PANEL SECTION

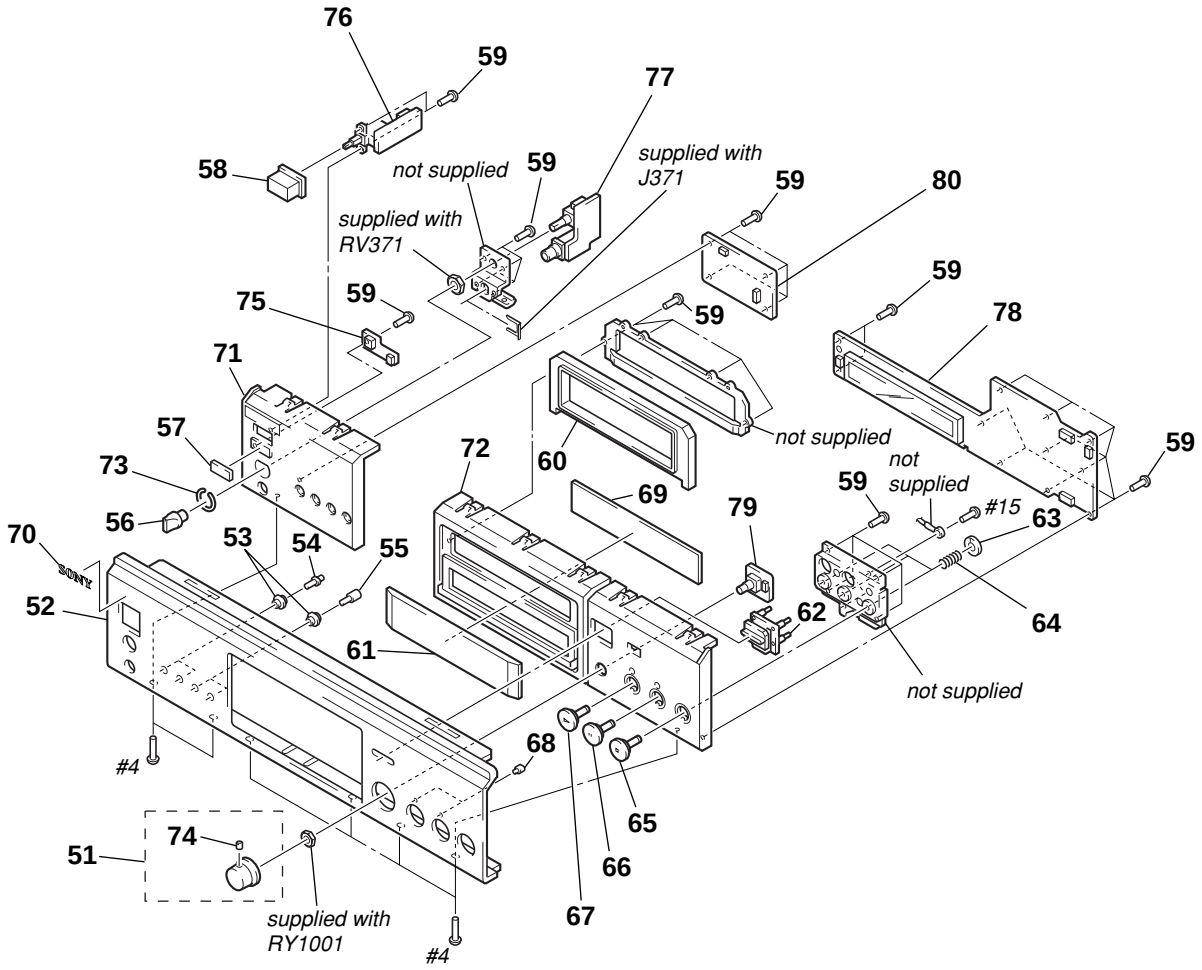

Ref. No.	Part No.	Description	Remark
51	4-230-637-01	KNOB (AMS) (GOLD)	
51	4-230-637-11	KNOB (AMS) (BLACK)	
52	4-230-614-21	PANEL, FRONT (GOLD)	
52	4-230-614-31	PANEL, FRONT (BLACK)	
53	4-220-711-01	INDICATOR (FILTER)	
54	4-220-317-01	BUTTON (FILTER)	
55	4-230-635-01	BUTTON (PLAY MODE)	
56	4-221-262-01	KNOB (VOL) (GOLD)	
56	4-221-262-11	KNOB (VOL) (BLACK)	
57	4-230-636-01	PLATE (REMOTE), INDICATION (GOLD)	
57	4-230-636-11	PLATE (ROMOTE), INDICATION (BLACK)	
58	4-923-520-51	KNOB, POWER (BLACK)	
58	4-923-520-61	KNOB, POWER (GOLD)	
59	4-951-620-01	SCREW (2.6X8), +BVTP	
60	4-230-641-01	PACKING (LOADING)	
61	4-230-631-01	PLATE, INDICATION (GOLD)	
61	4-230-631-11	PLATE, INDICATION (BLACK)	
62	X-4953-185-1	BUTTON (OPN/CLS) ASSY	
63	4-862-338-00	RING, STOPPER	
64	4-230-644-01	SPRING (BUTTON PLAY)	
65	X-4953-211-1	BUTTON (STOP) ASSY (GOLD)	

Ref. No.	Part No.	Description	Remark
65	X-4953-212-1	BUTTON (STOP) ASSY (BLACK)	
66	X-4953-209-1	BUTTON (PAUSE) ASSY (GOLD)	
66	X-4953-210-1	BUTTON (PAUSE) ASSY (BLACK)	
67	X-4953-183-1	BUTTON (PLAY) ASSY (GOLD)	
67	X-4953-184-1	BUTTON (PLAY) ASSY (BLACK)	
68	4-230-638-01	INDICATOR (BUTTON PLAY)	
69	4-230-643-01	FILTER (DISPLAY)	
70	4-942-568-41	EMBLEM (NO.5) SONY (BLACK)	
71	4-230-627-01	BASE (L), PANEL (GOLD)	
71	4-230-627-11	BASE (L), PANEL (BLACK)	
72	4-230-628-01	BASE (R), PANEL (GOLD)	
72	4-230-628-11	BASE (R), PANEL (BLACK)	
73	3-354-981-01	SPRING (SUS), RING	
74	3-701-506-01	SET SCREW, DUBLE POINT 3X4	
75	1-679-084-11	R.CNTL BOARD	
76	1-681-799-11	AC SW BOARD	
77	1-681-800-11	HP BOARD	
78	A-4726-083-A	DISPLAY BOARD, COMPLETE	
79	1-679-083-11	JOG BOARD	
80	1-679-082-11	KEY BOARD	

6-3. CHASSIS SECTION-1

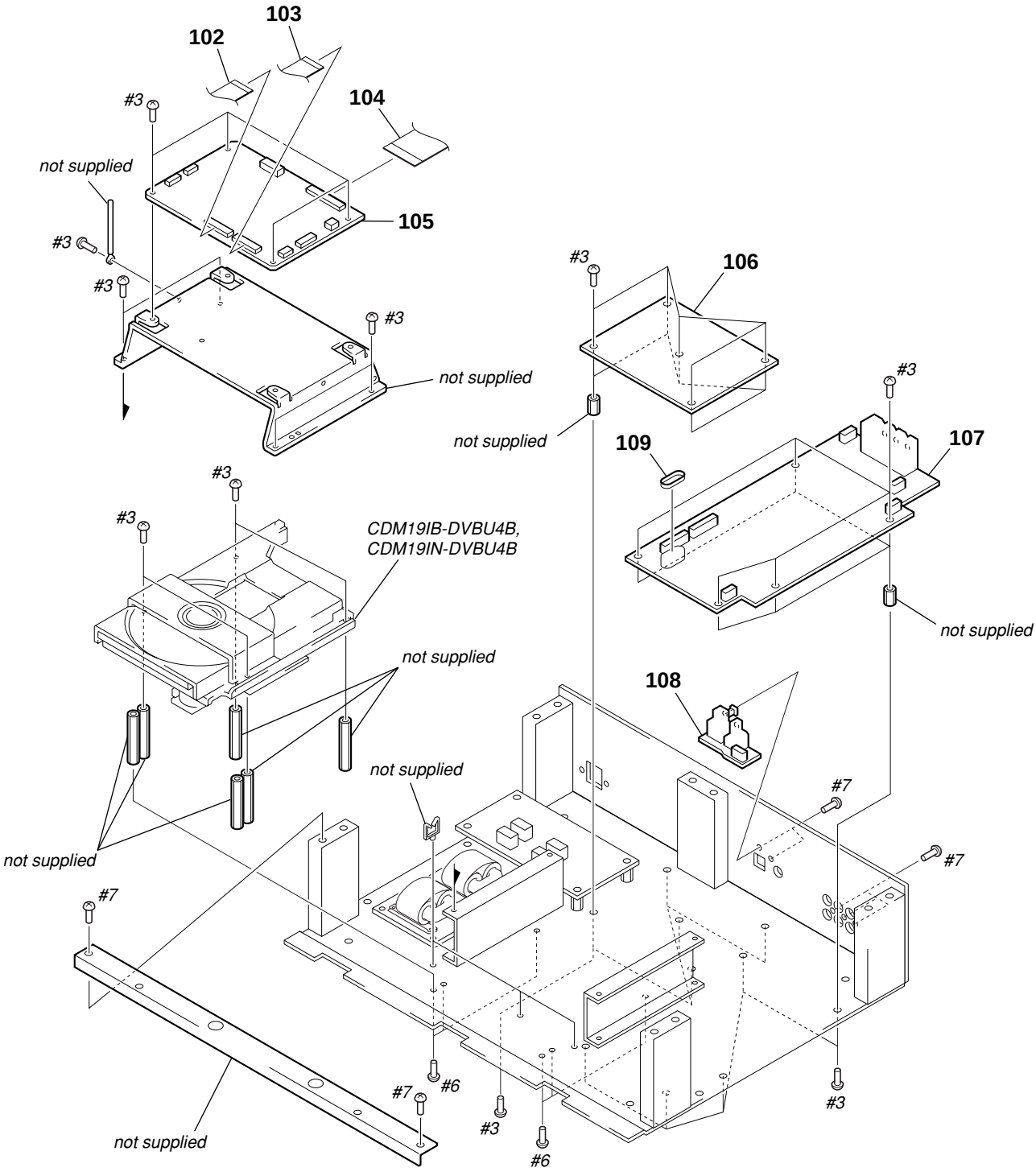

Ref. No.	Part No.	Description	Remark	Ref. No.	Part No.	Description	Remark
102	1-757-931-11	WIRE (FLAT TYPE) (19 CORE)		106	A-4726-080-A	POWER BOARD, COMPLETE	
103	1-757-932-11	WIRE (FLAT TYPE) (19 CORE)		107	A-4726-075-A	AUDIO BOARD, COMPLETE	
104	1-757-098-11	WIRE (FLAT TYPE) (35 CORE)		108	1-681-774-11	D.OUT BOARD	
105	A-4726-087-A	MAIN BOARD, COMPLETE		109	4-211-300-01	RING, RUBBER	

6-4. CHASSIS SECTION-2

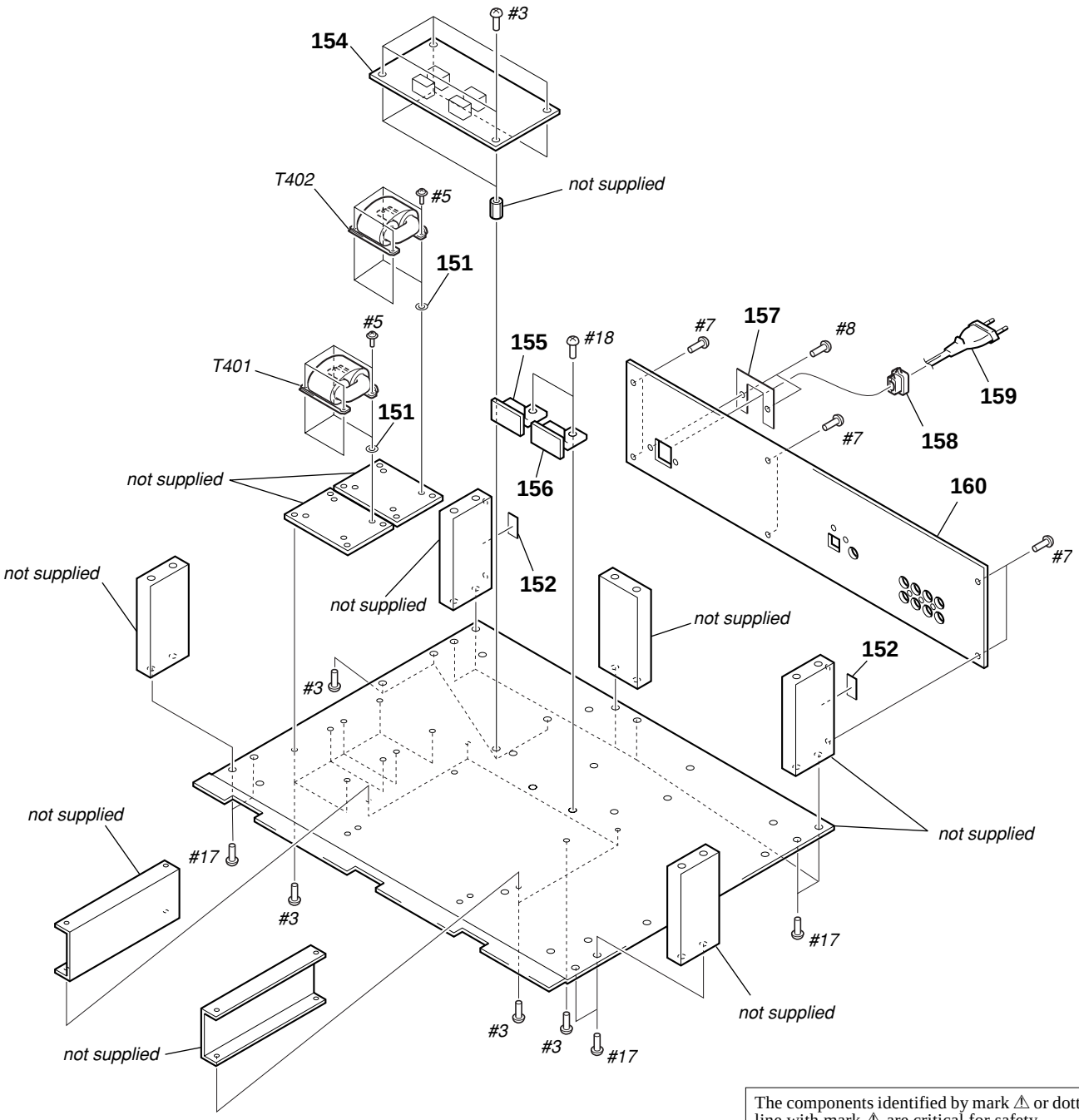

The components identified by mark ⚠ or dotted line with mark ⚠ are critical for safety.
Replace only with part number specified.

Ref. No.	Part No.	Description	Remark
151	4-971-099-01	WASHER (P)	
152	4-226-596-01	SHEET, COPPER LEAF	
154	1-681-798-11	AC BOARD	
155	1-681-772-11	IC-1 BOARD	
156	1-681-773-11	IC-2 BOARD	
* 157	4-923-873-01	BRACKET, CORD STOPPER	
158	3-703-244-00	BUSHING (2104), CORD	
⚠159	1-558-568-21	CORD, POWER	
160	4-235-003-12	PANEL, BACK	
⚠T401	1-437-363-11	TRANSFORMER, POWER (for DRIVE)	
⚠T402	1-437-362-11	TRANSFORMER, POWER (for AUDIO)	

6-5. MECHANISM DECK SECTION
(CDM19IB-DVBU4B: BLACK TYPE / CDM19IN-DVBU4B: GOLD TYPE)

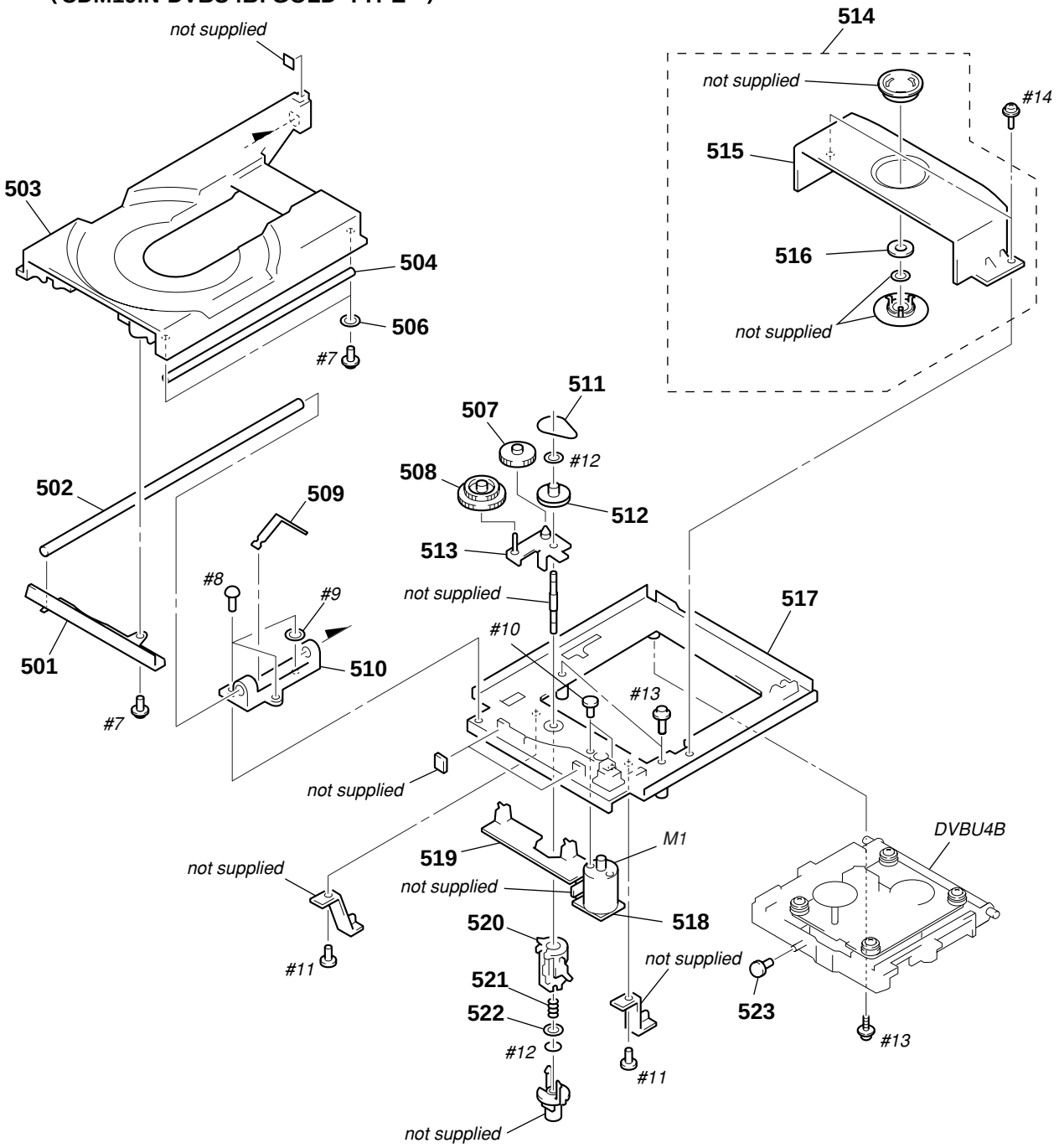

Ref. No.	Part No.	Description	Remark
501	4-228-673-01	BRACKET (DISC TABLE)	
* 502	4-948-368-02	BAR (MAIN), GUIDE	
503	4-948-353-08	TABLE, DISC (BLACK)	
503	4-948-353-18	TABLE, DISC (GOLD)	
* 504	4-948-369-01	BAR (SUB), GUIDE	
506	4-927-318-01	WASHER	
507	4-967-268-01	GEAR (C)	
508	4-927-620-03	GEAR (P)	
* 509	4-927-648-01	SLIDER (GROUND)	
* 510	4-948-360-01	BEARING, LOADING	
511	4-927-649-01	BELT	
512	4-929-724-01	PULLEY (B)	

Ref. No.	Part No.	Description	Remark
513	X-4927-608-2	ARM ASSY, SWING	
514	A-4735-483-A	HOLDER (A.P.) ASSY	
* 515	4-948-356-03	HOLDER (A.P.)	
516	3-053-844-01	YOKE	
* 517	4-948-355-05	CHASSIS (OUTSERT)	
* 518	1-641-765-13	LOADING MOTOR BOARD	
* 519	1-641-764-13	SWITCH BOARD	
* 520	4-948-371-02	CAM (BU)	
521	3-659-338-01	SPRING, COMPRESSION	
522	4-927-654-01	WASHER (LIMITER)	
523	4-927-631-01	ROLLER (L)	
M1	A-4604-347-A	MOTOR (L) ASSY (LOADING)	

6-6. BASE UNIT SECTION (DVBU4B)

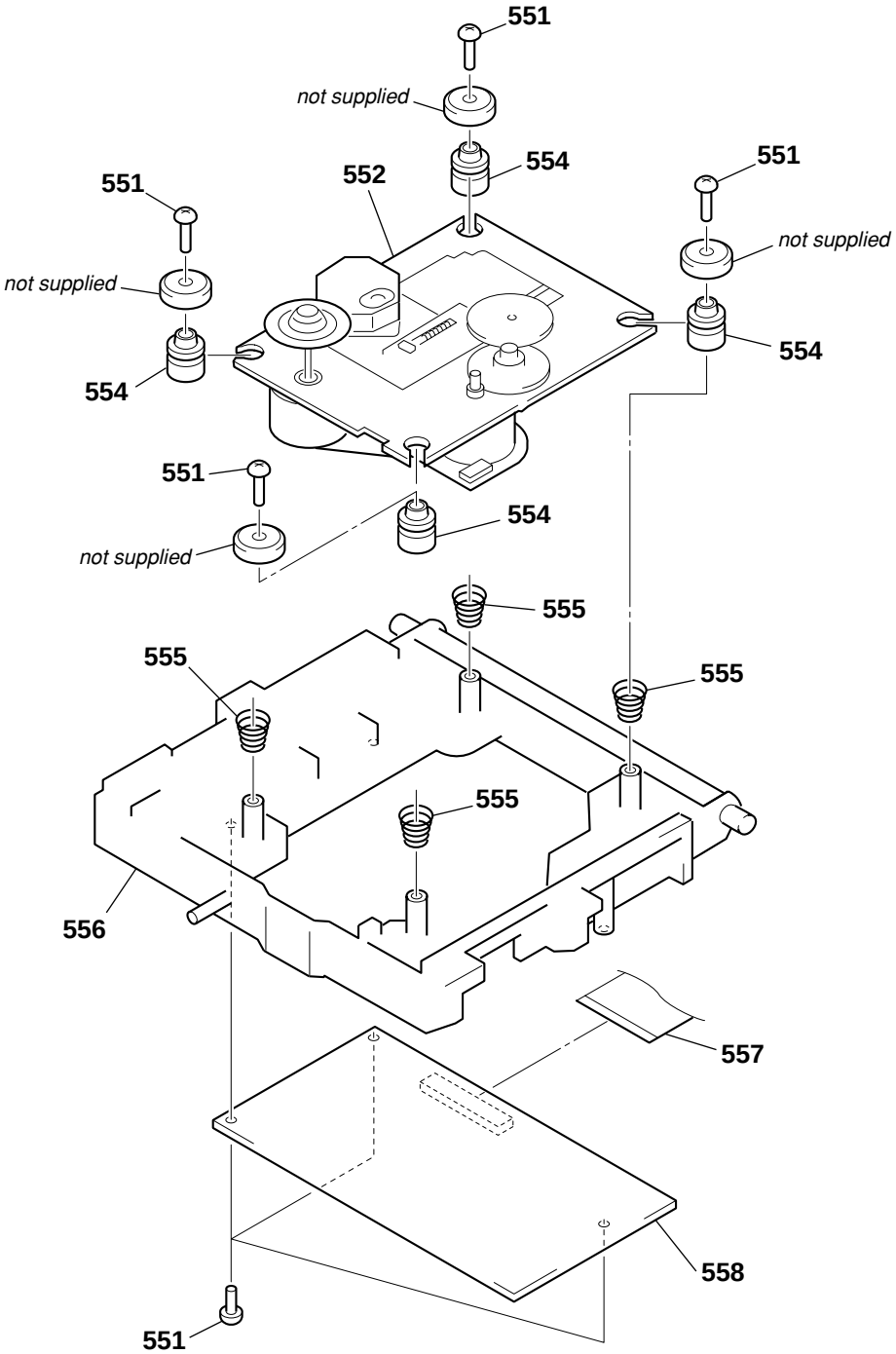

The components identified by mark ⚠ or dotted line with mark ⚠ are critical for safety.
Replace only with part number specified.

Ref. No.	Part No.	Description	Remark
551	4-951-620-01	SCREW (2.6X8), +BVTP	
⚠552	8-820-132-03	DEVICE, OPTICAL (KHM-230AAA/J1RP)	
554	4-227-549-11	INSULATOR	
555	4-231-449-11	SPRING (230), CONE TYPE COIL	
556	4-228-669-02	HOLDER (KHM230)	
557	1-757-097-11	WIRE (FLAT TYPE) (25 CORE)	
558	A-4726-527-A	RF BOARD, COMPLETE	

SECTION 7
ELECTRICAL PARTS LIST

AC | AC SW | AUDIO

NOTE:
- Due to standardization, replacements in the parts list may be different from the parts specified in the diagrams or the components used on the set.
- -XX and -X mean standardized parts, so they may have some difference from the original one.
- RESISTORS
  All resistors are in ohms.
  METAL: Metal-film resistor.
  METAL OXIDE: Metal oxide-film resistor.
  F: nonflammable
- Items marked "*" are not stocked since they are seldom required for routine service.
  Some delay should be anticipated when ordering these items.
- SEMICONDUCTORS
  In each case, u: µ, for example:
  uA. . : µA. . uPA. . : µPA. .
  uPB. . : µPB. . uPC. . : µPC. .
  uPD. . : µPD. .
- CAPACITORS
  uF: µF
- COILS
  uH: µH

The components identified by mark ⚠ or dotted line with mark ⚠ are critical for safety.
Replace only with part number specified.

When indicating parts by reference number, please include the board.

Ref. No.	Part No.	Description			Remark
	1-681-798-11	AC BOARD			
		*********			
		< CAPACITOR >			
⚠C490	1-127-798-51	CERAMIC	4700PF	20%	250V
⚠C491	1-127-798-51	CERAMIC	4700PF	20%	250V
		< CONNECTOR >			
* CN490	1-564-321-21	PIN, CONNECTOR 2P			
CN491	1-564-321-00	PIN, CONNECTOR 2P			
* CN492	1-580-230-11	PIN, CONNECTOR (PC BOARD) 2P			
CN493	1-770-128-11	PIN, CONNECTOR 2P			
		< LINE FILTER >			
⚠L490	1-424-485-11	FILTER, LINE			
**********					
	1-681-799-11	AC SW BOARD			
		**********			
		< CAPACITOR >			
⚠C496	1-113-927-11	CERAMIC	10000PF	20%	250V
		< CONNECTOR >			
* CN494	1-580-230-31	PIN, CONNECTOR (PC BOARD) 2P			
		< SWITCH >			
⚠S490	1-572-267-51	SWITCH, PUSH (AC POWER) (1 KEY)			(POWER)
**********					
	A-4726-075-A	AUDIO BOARD, COMPLETE			
		**********			
*	4-941-237-01	HEAT SINK			
	7-685-872-09	SCREW +BVTT 3X8 (S)			
		< CAPACITOR >			
C101	1-165-319-11	CERAMIC CHIP	0.1uF		50V
C104	1-128-201-11	ELECT	100uF	20%	63V
C105	1-109-857-11	ELECT	47uF	20%	63V
C106	1-115-197-11	ELECT	100uF	20%	25V
C107	1-115-197-11	ELECT	100uF	20%	25V
C108	1-115-197-11	ELECT	100uF	20%	25V
C111	1-128-197-11	ELECT	10uF	20%	63V
C112	1-109-857-11	ELECT	47uF	20%	63V
C115	1-128-201-11	ELECT	100uF	20%	63V
C116	1-128-201-11	ELECT	100uF	20%	63V
C117	1-165-319-11	CERAMIC CHIP	0.1uF		50V
C118	1-128-197-11	ELECT	10uF	20%	50V
C120	1-136-817-11	FILM	0.0033uF	5%	100V
C121	1-136-817-11	FILM	0.0033uF	5%	100V
C122	1-136-817-11	FILM	0.0033uF	5%	100V
C123	1-136-814-11	FILM	0.001uF	5%	100V
C124	1-136-817-11	FILM	0.0033uF	5%	100V
C125	1-136-814-11	FILM	0.001uF	5%	100V
C126	1-165-789-21	FILM	0.0047uF	5%	50V
C127	1-136-810-11	FILM	220PF	5%	100V
C128	1-117-720-11	CERAMIC CHIP	4.7uF		10V
C130	1-128-201-11	ELECT	100uF	20%	63V
C131	1-128-654-21	FILM	2200PF	5%	50V
C132	1-127-741-21	ELECT	0.047uF	10%	250V
C133	1-128-654-21	FILM	2200PF	5%	50V
C135	1-128-197-11	ELECT	10uF	20%	63V
C136	1-128-197-11	ELECT	10uF	20%	63V
C137	1-109-857-11	ELECT	47uF	20%	63V
C138	1-109-857-11	ELECT	47uF	20%	63V
C140	1-128-654-21	FILM	2200PF	5%	50V
C141	1-128-654-21	FILM	2200PF	5%	50V
C142	1-128-654-21	FILM	2200PF	5%	50V
C150	1-136-817-11	FILM	0.0033uF	5%	100V
C151	1-136-817-11	FILM	0.0033uF	5%	100V
C152	1-136-817-11	FILM	0.0033uF	5%	100V
C153	1-136-814-11	FILM	0.001uF	5%	100V
C154	1-136-817-11	FILM	0.0033uF	5%	100V
C155	1-136-814-11	FILM	0.001uF	5%	100V
C156	1-165-789-21	FILM	0.0047uF	5%	50V
C157	1-136-810-11	FILM	220PF	5%	100V
C160	1-128-201-11	ELECT	100uF	20%	63V
C161	1-128-654-21	FILM	2200PF	5%	50V
C162	1-127-741-21	ELECT	0.047uF	10%	250V
C163	1-128-654-21	FILM	2200PF	5%	50V
C165	1-128-197-11	ELECT	10uF	20%	63V
C166	1-128-197-11	ELECT	10uF	20%	63V
C167	1-109-857-11	ELECT	47uF	20%	63V
C168	1-109-857-11	ELECT	47uF	20%	63V
C170	1-128-654-21	FILM	2200PF	5%	50V
C176	1-119-815-21	ELECT	2200uF	20%	35V

AUDIO

Ref. No.	Part No.	Description			Remark
C177	1-115-197-11	ELECT	100uF	20%	25V
C178	1-163-133-00	CERAMIC CHIP	470PF	5%	50V
C179	1-128-201-11	ELECT	100uF	20%	63V
C180	1-128-197-11	ELECT	10uF	20%	63V
C181	1-115-197-11	ELECT	100uF	20%	25V
C183	1-115-197-11	ELECT	100uF	20%	25V
C184	1-115-197-11	ELECT	100uF	20%	25V
C186	1-128-197-11	ELECT	10uF	20%	63V
C187	1-109-857-11	ELECT	47uF	20%	63V
C190	1-128-201-11	ELECT	100uF	20%	63V
C191	1-128-201-11	ELECT	100uF	20%	63V
C192	1-165-319-11	CERAMIC CHIP	0.1uF		50V
C194	1-128-654-21	FILM	2200PF	5%	50V
C195	1-128-654-21	FILM	2200PF	5%	50V
C196	1-128-201-11	ELECT	100uF	20%	63V
C197	1-127-741-21	ELECT	0.047uF	10%	250V
C202	1-128-201-11	ELECT	100uF	20%	63V
C205	1-115-197-11	ELECT	100uF	20%	25V
C206	1-109-857-11	ELECT	47uF	20%	63V
C207	1-115-197-11	ELECT	100uF	20%	25V
C208	1-115-197-11	ELECT	100uF	20%	25V
C210	1-165-319-11	CERAMIC CHIP	0.1uF		50V
C211	1-128-197-11	ELECT	10uF	20%	63V
C212	1-109-857-11	ELECT	47uF	20%	63V
C215	1-109-857-11	ELECT	47uF	20%	63V
C216	1-109-857-11	ELECT	47uF	20%	63V
C217	1-165-319-11	CERAMIC CHIP	0.1uF		50V
C220	1-136-817-11	FILM	0.0033uF	5%	100V
C221	1-136-817-11	FILM	0.0033uF	5%	100V
C222	1-136-817-11	FILM	0.0033uF	5%	100V
C223	1-136-814-11	FILM	0.001uF	5%	100V
C224	1-136-817-11	FILM	0.0033uF	5%	100V
C225	1-136-814-11	FILM	0.001uF	5%	100V
C226	1-136-818-11	FILM	0.0047uF	5%	100V
C227	1-136-810-11	FILM	220PF	5%	100V
C230	1-128-201-11	ELECT	100uF	20%	63V
C231	1-136-818-11	FILM	0.0047uF	5%	100V
C235	1-128-197-11	ELECT	10uF	20%	63V
C236	1-128-197-11	ELECT	10uF	20%	63V
C237	1-128-197-11	ELECT	10uF	20%	63V
C238	1-128-197-11	ELECT	10uF	20%	63V
C250	1-136-817-11	FILM	0.0033uF	5%	100V
C251	1-136-817-11	FILM	0.0033uF	5%	100V
C252	1-136-817-11	FILM	0.0033uF	5%	100V
C253	1-136-814-11	FILM	0.001uF	5%	100V
C254	1-136-817-11	FILM	0.0033uF	5%	100V
C255	1-136-814-11	FILM	0.001uF	5%	100V
C256	1-136-818-11	FILM	0.0047uF	5%	100V
C257	1-136-810-11	FILM	220PF	5%	100V
C260	1-128-201-11	ELECT	100uF	20%	63V
C261	1-136-818-11	FILM	0.0047uF	5%	100V
C265	1-128-197-11	ELECT	10uF	20%	63V
C266	1-128-197-11	ELECT	10uF	20%	63V
C267	1-128-197-11	ELECT	10uF	20%	63V
C268	1-128-197-11	ELECT	10uF	20%	63V
C270	1-165-627-21	FILM	27PF	10%	50V
C271	1-165-627-21	FILM	27PF	10%	50V
C272	1-165-319-11	CERAMIC CHIP	0.1uF		50V
C273	1-164-346-11	CERAMIC CHIP	1uF		16V
C274	1-115-197-11	ELECT	100uF	20%	25V
C275	1-128-197-11	ELECT	10uF	20%	63V
C276	1-128-197-11	ELECT	10uF	20%	63V
C277	1-164-346-11	CERAMIC CHIP	1uF		16V
C278	1-117-775-31	ELECT	0.1uF	10%	250V
C279	1-164-346-11	CERAMIC CHIP	1uF		16V
C280	1-128-201-11	ELECT	100uF	20%	63V
C282	1-128-202-11	ELECT	220uF	20%	63V
C288	1-115-197-11	ELECT	100uF	20%	25V
C289	1-117-720-11	CERAMIC CHIP	4.7uF		10V
C303	1-128-201-11	ELECT	100uF	20%	63V
C305	1-109-857-11	ELECT	47uF	20%	63V
C306	1-115-197-11	ELECT	100uF	20%	25V
C307	1-115-197-11	ELECT	100uF	20%	25V
C308	1-115-197-11	ELECT	100uF	20%	25V
C311	1-128-197-11	ELECT	10uF	20%	50V
C312	1-109-857-11	ELECT	47uF	20%	63V
C315	1-109-857-11	ELECT	47uF	20%	63V
C316	1-109-857-11	ELECT	47uF	20%	63V
C317	1-165-319-11	CERAMIC CHIP	0.1uF		50V
C320	1-136-817-11	FILM	0.0033uF	5%	100V
C321	1-136-817-11	FILM	0.0033uF	5%	100V
C322	1-136-817-11	FILM	0.0033uF	5%	100V
C323	1-136-814-11	FILM	0.001uF	5%	100V
C324	1-136-817-11	FILM	0.0033uF	5%	100V
C325	1-136-814-11	FILM	0.001uF	5%	100V
C326	1-136-818-11	FILM	0.0047uF	5%	100V
C327	1-136-810-11	FILM	220PF	5%	100V
C330	1-128-201-11	ELECT	100uF	20%	63V
C331	1-136-818-11	FILM	0.0047uF	5%	100V
C335	1-128-197-11	ELECT	10uF	20%	63V
C336	1-128-197-11	ELECT	10uF	20%	63V
C337	1-128-197-11	ELECT	10uF	20%	63V
C338	1-128-197-11	ELECT	10uF	20%	63V
C350	1-136-817-11	FILM	0.0033uF	5%	100V
C351	1-136-817-11	FILM	0.0033uF	5%	100V
C352	1-136-817-11	FILM	0.0033uF	5%	100V
C353	1-136-814-11	FILM	0.001uF	5%	100V
C354	1-136-817-11	FILM	0.0033uF	5%	100V
C355	1-136-814-11	FILM	0.001uF	5%	100V
C356	1-136-818-11	FILM	0.0047uF	5%	100V
C357	1-136-810-11	FILM	220PF	5%	100V
C360	1-128-201-11	ELECT	100uF	20%	63V
C361	1-136-818-11	FILM	0.0047uF	5%	100V
C365	1-128-197-11	ELECT	10uF	20%	50V
C366	1-128-197-11	ELECT	10uF	20%	50V
C367	1-128-197-11	ELECT	10uF	20%	63V
C368	1-128-197-11	ELECT	10uF	20%	63V
C370	1-163-117-00	CERAMIC CHIP	100PF	5%	50V
C371	1-163-117-00	CERAMIC CHIP	100PF	5%	50V
C372	1-135-669-11	ELECT	470uF		10V
C380	1-163-117-00	CERAMIC CHIP	100PF	5%	50V
C381	1-163-117-00	CERAMIC CHIP	100PF	5%	50V
C382	1-135-669-11	ELECT	470uF		10V
C390	1-165-319-11	CERAMIC CHIP	0.1uF		50V
C391	1-119-801-21	ELECT	220uF	20%	16V

AUDIO

Ref. No.	Part No.	Description				Remark
C392	1-119-801-21	ELECT	220uF	20%	16V	
C393	1-163-141-00	CERAMIC CHIP	0.001uF	5%	50V	
C394	1-163-141-00	CERAMIC CHIP	0.001uF	5%	50V	
		< CONNECTOR >				
CN101	1-506-468-11	PIN, CONNECTOR 3P				
CN170	1-506-469-11	PIN, CONNECTOR 4P				
CN171	1-770-167-11	CONNECTOR, FFC/FPC 19P				
CN172	1-770-167-11	CONNECTOR, FFC/FPC 19P				
CN173	1-564-506-11	PLUG, CONNECTOR 3P				
* CN201	1-506-468-11	PIN, CONNECTOR 3P				
* CN301	1-568-952-11	PIN, CONNECTOR (STRAIGHT) 3P				
CN390	1-506-468-11	PIN, CONNECTOR 3P				
* CN393	1-568-952-11	PIN, CONNECTOR (STRAIGHT) 3P				
		< DIODE >				
D115	8-719-016-74	DIODE	1SS352-TPH3			
D170	8-719-210-39	DIODE	EC10QS04-TE12L5			
D171	8-719-049-09	DIODE	1SS367-T3SONY			
D172	8-719-049-09	DIODE	1SS367-T3SONY			
D173	8-719-049-09	DIODE	1SS367-T3SONY			
D174	8-719-210-39	DIODE	EC10QS04-TE12L5			
D175	8-719-049-09	DIODE	1SS367-T3SONY			
D176	8-719-049-09	DIODE	1SS367-T3SONY			
D215	8-719-016-74	DIODE	1SS352-TPH3			
D315	8-719-016-74	DIODE	1SS352-TPH3			
D390	8-719-977-28	DIODE	UDZSTE-1710B			
D391	8-719-016-74	DIODE	1SS352-TPH3			
		< FUSIBLE RESISTOR >				
⚠FR390	1-212-849-00	FUSIBLE	4.7	5%	1/4W	
⚠FR391	1-212-889-00	FUSIBLE	220	5%	1/4W	
⚠FR392	1-212-889-00	FUSIBLE	220	5%	1/4W	
		< IC >				
IC23	8-759-711-85	IC	NJM4580E-D			
IC115	8-759-836-44	IC	CXD9657N/2K			
IC120	8-759-566-39	IC	OPA2132UA/2K5			
IC121	8-759-566-39	IC	OPA2132UA/2K5			
IC150	8-759-566-39	IC	OPA2132UA/2K5			
IC151	8-759-566-39	IC	OPA2132UA/2K5			
IC170	8-759-486-55	IC	NJM2370U33-TE2			
IC171	8-759-711-85	IC	NJM4580E-D			
IC172	8-759-231-53	IC	M5F7805L			
IC173	8-759-711-85	IC	NJM4580E-D			
IC215	8-759-836-44	IC	CXD9657N/2K			
IC220	8-759-566-39	IC	OPA2132UA/2K5			
IC221	8-759-566-39	IC	OPA2132UA/2K5			
IC250	8-759-566-39	IC	OPA2132UA/2K5			
IC251	8-759-566-39	IC	OPA2132UA/2K5			
IC270	6-700-066-01	IC	HD74LV157ATELL			
IC271	6-700-067-01	IC	HD74LV161ATELL			
IC272	8-759-591-61	IC	TC7WHU04FU (TE12R)			
IC273	8-759-585-52	IC	SN74AHC1GU04DBVR			
IC315	8-759-836-44	IC	CXD9657N/2K			
IC320	8-759-566-39	IC	OPA2132UA/2K5			
IC321	8-759-566-39	IC	OPA2132UA/2K5			
IC350	8-759-566-39	IC	OPA2132UA/2K5			
IC351	8-759-566-39	IC	OPA2132UA/2K5			
		< JACK >				
J170	1-785-489-11	JACK, PIN 6P (5.1CH OUT)				
J171	1-785-868-21	JACK, PIN 2P (2CH OUT)				
		< COIL >				
L102	1-424-090-11	COIL, LINE FILTER				
L171	1-424-090-11	COIL, LINE FILTER				
L202	1-424-090-11	COIL, LINE FILTER				
L220	1-414-170-11	INDUCTOR	100uH			
L250	1-414-170-11	INDUCTOR	100uH			
L302	1-424-090-11	COIL, LINE FILTER				
L320	1-414-170-11	INDUCTOR	100uH			
L350	1-414-170-11	INDUCTOR	100uH			
L370	1-412-004-31	INDUCTOR	6.8uH			
L380	1-412-004-31	INDUCTOR	6.8uH			
L390	1-408-619-31	INDUCTOR	220uH			
L391	1-408-619-31	INDUCTOR	220uH			
L392	1-412-004-31	INDUCTOR	6.8uH			
L393	1-412-004-31	INDUCTOR	6.8uH			
		< TRANSISTOR >				
Q101	8-729-202-05	TRANSISTOR	2SC2873O-TE12L			
Q102	8-729-202-05	TRANSISTOR	2SC2873O-TE12L			
Q103	8-729-202-05	TRANSISTOR	2SC2873O-TE12L			
Q350	8-729-141-74	TRANSISTOR	2SC3624A-T2L15L16			
Q351	8-729-027-38	TRANSISTOR	DTA144EKA-T146			
Q352	8-729-900-53	TRANSISTOR	DTC114EKA-T146			
Q370	8-729-141-74	TRANSISTOR	2SC3624A-T2L15L16			
Q380	8-729-141-74	TRANSISTOR	2SC3624A-T2L15L16			
Q391	8-729-900-53	TRANSISTOR	DTC114EKA-T146			
Q392	8-729-207-71	TRANSISTOR	RN2405-TE85L			
Q393	8-729-027-38	TRANSISTOR	DTA144EKA-T146			
		< RESISTOR >				
R101	1-216-017-00	RES-CHIP	47	5%	1/10W	
R102	1-216-041-00	METAL CHIP	470	5%	1/10W	
R103	1-216-009-00	RES-CHIP	22	5%	1/10W	
R104	1-216-009-00	RES-CHIP	22	5%	1/10W	
R105	1-216-041-00	METAL CHIP	470	5%	1/10W	
R106	1-259-937-11	CARBON MELF	16K	2%	1/8W	
R107	1-259-987-11	CARBON MELF	220	2%	1/8W	
R108	1-216-025-11	RES-CHIP	100	5%	1/10W	
R109	1-216-049-11	RES-CHIP	1K	5%	1/10W	
R111	1-216-025-11	RES-CHIP	100	5%	1/10W	
R112	1-216-025-11	RES-CHIP	100	5%	1/10W	
R121	1-259-994-11	CARBON MELF	820	2%	1/8W	
R123	1-259-994-11	CARBON MELF	820	2%	1/8W	
R124	1-259-998-11	CARBON MELF	1.8K	2%	1/8W	
R125	1-259-998-11	CARBON MELF	1.8K	2%	1/8W	
R126	1-259-925-11	CARBON MELF	1.6K	2%	1/8W	
R127	1-259-998-11	CARBON MELF	1.8K	2%	1/8W	
R128	1-259-998-11	CARBON MELF	1.8K	2%	1/8W	
R129	1-259-925-11	CARBON MELF	1.6K	2%	1/8W	
R130	1-260-002-11	CARBON MELF	3.3K	2%	1/8W	

The components identified by mark ⚠ or dotted line with mark ⚠ are critical for safety.
Replace only with part number specified.

AUDIO

Ref. No.	Part No.	Description			Remark
R131	1-260-001-11	CARBON MELF	2.7K	2%	1/8W
R132	1-260-002-11	CARBON MELF	3.3K	2%	1/8W
R134	1-259-971-11	CARBON MELF	10	2%	1/8W
R135	1-259-971-11	CARBON MELF	10	2%	1/8W
R136	1-259-971-11	CARBON MELF	10	2%	1/8W
R151	1-259-994-11	CARBON MELF	820	2%	1/8W
R153	1-259-994-11	CARBON MELF	820	2%	1/8W
R154	1-259-998-11	CARBON MELF	1.8K	2%	1/8W
R155	1-259-998-11	CARBON MELF	1.8K	2%	1/8W
R156	1-259-925-11	CARBON MELF	1.6K	2%	1/8W
R157	1-259-998-11	CARBON MELF	1.8K	2%	1/8W
R158	1-259-998-11	CARBON MELF	1.8K	2%	1/8W
R159	1-259-925-11	CARBON MELF	1.6K	2%	1/8W
R160	1-260-002-11	CARBON MELF	3.3K	2%	1/8W
R161	1-260-001-11	CARBON MELF	2.7K	2%	1/8W
R162	1-260-002-11	CARBON MELF	3.3K	2%	1/8W
R164	1-259-971-11	CARBON MELF	10	2%	1/8W
R165	1-259-971-11	CARBON MELF	10	2%	1/8W
R166	1-259-971-11	CARBON MELF	10	2%	1/8W
R170	1-216-073-11	RES-CHIP	10K	5%	1/10W
R171	1-216-041-00	METAL CHIP	470	5%	1/10W
R172	1-216-041-00	METAL CHIP	470	5%	1/10W
R173	1-216-041-00	METAL CHIP	470	5%	1/10W
R174	1-216-041-00	METAL CHIP	470	5%	1/10W
R175	1-216-025-11	RES-CHIP	100	5%	1/10W
R177	1-216-009-00	RES-CHIP	22	5%	1/10W
R178	1-216-049-11	RES-CHIP	1K	5%	1/10W
R179	1-216-033-00	METAL CHIP	220	5%	1/10W
R180	1-216-065-00	RES-CHIP	4.7K	5%	1/10W
R182	1-216-045-00	METAL CHIP	680	5%	1/10W
R201	1-216-041-00	METAL CHIP	470	5%	1/10W
R202	1-216-041-00	METAL CHIP	470	5%	1/10W
R203	1-259-937-11	CARBON MELF	16K	2%	1/8W
R204	1-259-987-11	CARBON MELF	220	2%	1/8W
R221	1-259-994-11	CARBON MELF	820	2%	1/8W
R223	1-259-994-11	CARBON MELF	820	2%	1/8W
R224	1-259-998-11	CARBON MELF	1.8K	2%	1/8W
R225	1-259-998-11	CARBON MELF	1.8K	2%	1/8W
R226	1-259-925-11	CARBON MELF	1.6K	2%	1/8W
R227	1-259-998-11	CARBON MELF	1.8K	2%	1/8W
R228	1-259-998-11	CARBON MELF	1.8K	2%	1/8W
R229	1-259-925-11	CARBON MELF	1.6K	2%	1/8W
R230	1-260-002-11	CARBON MELF	3.3K	2%	1/8W
R231	1-260-001-11	CARBON MELF	2.7K	2%	1/8W
R232	1-260-002-11	CARBON MELF	3.3K	2%	1/8W
R234	1-259-971-11	CARBON MELF	10	2%	1/8W
R235	1-259-971-11	CARBON MELF	10	2%	1/8W
R236	1-260-028-11	CARBON MELF	470K	2%	1/8W
R251	1-259-994-11	CARBON MELF	820	2%	1/8W
R253	1-259-994-11	CARBON MELF	820	2%	1/8W
R254	1-259-998-11	CARBON MELF	1.8K	2%	1/8W
R255	1-259-998-11	CARBON MELF	1.8K	2%	1/8W
R256	1-259-925-11	CARBON MELF	1.6K	2%	1/8W
R257	1-259-998-11	CARBON MELF	1.8K	2%	1/8W
R258	1-259-998-11	CARBON MELF	1.8K	2%	1/8W
R259	1-259-925-11	CARBON MELF	1.6K	2%	1/8W
R260	1-260-002-11	CARBON MELF	3.3K	2%	1/8W
R261	1-260-001-11	CARBON MELF	2.7K	2%	1/8W
R262	1-260-002-11	CARBON MELF	3.3K	2%	1/8W
R264	1-259-971-11	CARBON MELF	10	2%	1/8W
R265	1-259-971-11	CARBON MELF	10	2%	1/8W
R266	1-260-028-11	CARBON MELF	470K	2%	1/8W
R270	1-216-041-00	METAL CHIP	470	5%	1/10W
R271	1-216-041-00	METAL CHIP	470	5%	1/10W
R272	1-259-994-11	CARBON MELF	820	2%	1/8W
R273	1-216-041-00	METAL CHIP	470	5%	1/10W
R274	1-260-032-11	CARBON MELF	1M	2%	1/8W
R275	1-216-017-00	RES-CHIP	47	5%	1/10W
R276	1-216-073-11	RES-CHIP	10K	5%	1/10W
R277	1-216-017-00	RES-CHIP	47	5%	1/10W
R278	1-216-017-00	RES-CHIP	47	5%	1/10W
R279	1-216-017-00	RES-CHIP	47	5%	1/10W
R280	1-216-017-00	RES-CHIP	47	5%	1/10W
R281	1-216-017-00	RES-CHIP	47	5%	1/10W
R282	1-216-017-00	RES-CHIP	47	5%	1/10W
R283	1-216-017-00	RES-CHIP	47	5%	1/10W
R284	1-216-017-00	RES-CHIP	47	5%	1/10W
R285	1-216-041-00	METAL CHIP	470	5%	1/10W
R286	1-216-049-11	RES-CHIP	1K	5%	1/10W
R301	1-216-041-00	METAL CHIP	470	5%	1/10W
R305	1-216-041-00	METAL CHIP	470	5%	1/10W
R306	1-259-937-11	CARBON MELF	16K	2%	1/8W
R307	1-259-987-11	CARBON MELF	220	2%	1/8W
R308	1-216-081-00	METAL CHIP	22K	5%	1/10W
R309	1-216-061-00	METAL CHIP	3.3K	5%	1/10W
R318	1-216-105-00	RES-CHIP	220K	5%	1/10W
R319	1-216-081-00	METAL CHIP	22K	5%	1/10W
R321	1-259-994-11	CARBON MELF	820	2%	1/8W
R323	1-259-994-11	CARBON MELF	820	2%	1/8W
R324	1-259-998-11	CARBON MELF	1.8K	2%	1/8W
R325	1-259-998-11	CARBON MELF	1.8K	2%	1/8W
R326	1-259-925-11	CARBON MELF	1.6K	2%	1/8W
R327	1-259-998-11	CARBON MELF	1.8K	2%	1/8W
R328	1-259-998-11	CARBON MELF	1.8K	2%	1/8W
R329	1-259-925-11	CARBON MELF	1.6K	2%	1/8W
R330	1-260-002-11	CARBON MELF	3.3K	2%	1/8W
R331	1-260-001-11	CARBON MELF	2.7K	2%	1/8W
R332	1-260-002-11	CARBON MELF	3.3K	2%	1/8W
R334	1-259-971-11	CARBON MELF	10	2%	1/8W
R335	1-259-971-11	CARBON MELF	10	2%	1/8W
R336	1-260-028-11	CARBON MELF	470K	2%	1/8W
R351	1-259-994-11	CARBON MELF	820	2%	1/8W
R353	1-259-994-11	CARBON MELF	820	2%	1/8W
R354	1-259-998-11	CARBON MELF	1.8K	2%	1/8W
R355	1-259-998-11	CARBON MELF	1.8K	2%	1/8W
R356	1-259-925-11	CARBON MELF	1.6K	2%	1/8W
R357	1-259-998-11	CARBON MELF	1.8K	2%	1/8W
R358	1-259-998-11	CARBON MELF	1.8K	2%	1/8W
R359	1-259-925-11	CARBON MELF	1.6K	2%	1/8W
R360	1-260-002-11	CARBON MELF	3.3K	2%	1/8W
R361	1-260-001-11	CARBON MELF	2.7K	2%	1/8W
R362	1-260-002-11	CARBON MELF	3.3K	2%	1/8W
R364	1-259-971-11	CARBON MELF	10	2%	1/8W
R365	1-259-971-11	CARBON MELF	10	2%	1/8W
R366	1-260-028-11	CARBON MELF	470K	2%	1/8W

AUDIO | D.OUT | DISPLAY

Ref. No.	Part No.	Description			Remark
R367	1-260-002-11	CARBON MELF	3.3K	2%	1/8W
R370	1-216-093-11	RES-CHIP	68K	5%	1/10W
R371	1-216-085-11	RES-CHIP	33K	5%	1/10W
R372	1-216-085-11	RES-CHIP	33K	5%	1/10W
R373	1-216-093-11	RES-CHIP	68K	5%	1/10W
R374	1-216-065-00	RES-CHIP	4.7K	5%	1/10W
R375	1-216-019-00	METAL CHIP	56	5%	1/10W
R380	1-216-085-11	RES-CHIP	33K	5%	1/10W
R381	1-216-093-11	RES-CHIP	68K	5%	1/10W
R382	1-216-085-11	RES-CHIP	33K	5%	1/10W
R383	1-216-093-11	RES-CHIP	68K	5%	1/10W
R384	1-216-065-00	RES-CHIP	4.7K	5%	1/10W
R385	1-216-019-00	METAL CHIP	56	5%	1/10W
R390	1-216-081-00	METAL CHIP	22K	5%	1/10W
R391	1-216-081-00	METAL CHIP	22K	5%	1/10W
R392	1-216-105-00	RES-CHIP	220K	5%	1/10W
R393	1-216-097-11	RES-CHIP	100K	5%	1/10W
R394	1-216-049-11	RES-CHIP	1K	5%	1/10W
		< RELAY >			
RY101	1-755-295-11	RELAY			
RY201	1-755-295-11	RELAY			
RY301	1-755-295-11	RELAY			
		< VIBRATOR >			
X170	1-767-406-21	VIBRATOR, CRYSTAL (11.2896MHz)			

****

	1-681-774-11	D.OUT BOARD			
		**********			
		< CAPACITOR >			
C460	1-119-823-11	ELECT	4.7uF	20%	50V
C462	1-119-823-11	ELECT	4.7uF	20%	50V
C463	1-163-117-00	CERAMIC CHIP	100PF	5%	50V
C464	1-164-346-11	CERAMIC CHIP	1uF		16V
C465	1-165-319-11	CERAMIC CHIP	0.1uF		50V
		< CONNECTOR >			
CN460	1-506-468-11	PIN, CONNECTOR 3P			
		< IC >			
IC460	8-749-012-69	IC GP1F38T (OPTICAL)			
		< JACK >			
J460	1-770-905-21	JACK, PIN 1P (COAXIAL)			
		< FERRITE BEAD >			
L460	1-414-553-11	FERRITE			
L461	1-414-553-11	FERRITE			
		< TRANSISTOR >			
Q460	8-729-120-28	TRANSISTOR	2SC1623-T1-L5L6		
		< RESISTOR >			
R460	1-216-009-00	RES-CHIP	22	5%	1/10W
R462	1-216-055-00	METAL CHIP	1.8K	5%	1/10W
R463	1-216-055-00	METAL CHIP	1.8K	5%	1/10W
R464	1-216-033-00	METAL CHIP	220	5%	1/10W
R465	1-216-021-00	METAL CHIP	68	5%	1/10W
R466	1-216-097-11	RES-CHIP	100K	5%	1/10W

****

	A-4726-083-A	DISPLAY BOARD, COMPLETE			
		**********			
*	3-362-478-01	HOLDER (T), LED			
*	4-945-292-01	HOLDER, INDICATION TUBE			
		< CAPACITOR >			
C1001	1-126-177-11	ELECT	100uF	20%	10V
C1002	1-165-319-11	CERAMIC CHIP	0.1uF		50V
C1003	1-165-319-11	CERAMIC CHIP	0.1uF		50V
C1004	1-163-243-11	CERAMIC CHIP	47PF	5%	50V
C1005	1-163-141-00	CERAMIC CHIP	0.001uF	5%	50V
C1006	1-165-319-11	CERAMIC CHIP	0.1uF		50V
C1007	1-165-319-11	CERAMIC CHIP	0.1uF		50V
C1008	1-165-319-11	CERAMIC CHIP	0.1uF		50V
C1010	1-163-141-00	CERAMIC CHIP	0.001uF	5%	50V
C1011	1-163-141-00	CERAMIC CHIP	0.001uF	5%	50V
C1012	1-163-141-00	CERAMIC CHIP	0.001uF	5%	50V
C1013	1-163-141-00	CERAMIC CHIP	0.001uF	5%	50V
C1014	1-163-141-00	CERAMIC CHIP	0.001uF	5%	50V
C1015	1-163-141-00	CERAMIC CHIP	0.001uF	5%	50V
C1016	1-163-141-00	CERAMIC CHIP	0.001uF	5%	50V
C1017	1-163-141-00	CERAMIC CHIP	0.001uF	5%	50V
C1018	1-163-141-00	CERAMIC CHIP	0.001uF	5%	50V
C1019	1-163-141-00	CERAMIC CHIP	0.001uF	5%	50V
C1020	1-165-319-11	CERAMIC CHIP	0.1uF		50V
C1023	1-165-319-11	CERAMIC CHIP	0.1uF		50V
C1024	1-163-141-00	CERAMIC CHIP	0.001uF	5%	50V
C1080	1-165-319-11	CERAMIC CHIP	0.1uF		50V
		< CONNECTOR >			
* CN1001	1-568-944-11	PIN, CONNECTOR 6P			
CN1002	1-794-706-11	PIN, CONNECTOR 7P			
CN1003	1-793-673-11	CONNECTOR, BOARD TO BOARD 7P			
* CN1007	1-568-942-11	PIN, CONNECTOR 4P			
		< DIODE >			
D1003	8-719-301-44	LED SEL2410E-C-TP2 (▶)			
D1004	8-719-301-60	LED SEL2910A-C-TP2 (❚❚)			
D1005	8-719-988-61	DIODE 1SS355TE-17			
		< FLUORESCENT INDICATOR TUBE >			
FL1001	1-518-761-11	INDICATOR TUBE, FLUORESCENT			
		< IC >			
IC1001	8-752-926-42	IC CXP84120-091Q			
IC1002	8-759-583-23	IC MSM9201-03GS-K			
		< TRANSISTOR >			
Q1001	8-729-120-28	TRANSISTOR	2SC2412K-T-146-QR		
Q1002	8-729-120-28	TRANSISTOR	2SC2412K-T-146-QR		
Q1003	8-729-120-28	TRANSISTOR	2SC2412K-T-146-QR		

DISPLY | HP | IC-1

Ref. No.	Part No.	Description			Remark
Q1004	8-729-120-28	TRANSISTOR	2SC2412K-T-146-QR		
Q1005	8-729-120-28	TRANSISTOR	2SC2412K-T-146-QR		
Q1006	8-729-120-28	TRANSISTOR	2SC2412K-T-146-QR		
Q1007	8-729-120-28	TRANSISTOR	2SC2412K-T-146-QR		
Q1008	8-729-120-28	TRANSISTOR	2SC2412K-T-146-QR		
Q1009	8-729-120-28	TRANSISTOR	2SC2412K-T-146-QR		
Q1010	8-729-120-28	TRANSISTOR	2SC2412K-T-146-QR		
Q1021	8-729-027-23	TRANSISTOR	DTA114EKA-T146		
Q1022	8-729-027-23	TRANSISTOR	DTA114EKA-T146		
Q1023	8-729-027-23	TRANSISTOR	DTA114EKA-T146		
Q1024	8-729-027-23	TRANSISTOR	DTA114EKA-T146		
		< RESISTOR >			
R1001	1-216-025-11	RES-CHIP	100	5%	1/10W
R1002	1-216-025-11	RES-CHIP	100	5%	1/10W
R1003	1-216-025-11	RES-CHIP	100	5%	1/10W
R1004	1-216-025-11	RES-CHIP	100	5%	1/10W
R1005	1-216-025-11	RES-CHIP	100	5%	1/10W
R1006	1-216-025-11	RES-CHIP	100	5%	1/10W
R1007	1-216-025-11	RES-CHIP	100	5%	1/10W
R1008	1-216-025-11	RES-CHIP	100	5%	1/10W
R1009	1-216-025-11	RES-CHIP	100	5%	1/10W
R1010	1-216-025-11	RES-CHIP	100	5%	1/10W
R1011	1-216-089-11	RES-CHIP	47K	5%	1/10W
R1012	1-216-089-11	RES-CHIP	47K	5%	1/10W
R1013	1-216-089-11	RES-CHIP	47K	5%	1/10W
R1014	1-216-089-11	RES-CHIP	47K	5%	1/10W
R1015	1-216-089-11	RES-CHIP	47K	5%	1/10W
R1016	1-216-089-11	RES-CHIP	47K	5%	1/10W
R1017	1-216-089-11	RES-CHIP	47K	5%	1/10W
R1018	1-216-089-11	RES-CHIP	47K	5%	1/10W
R1019	1-216-089-11	RES-CHIP	47K	5%	1/10W
R1020	1-216-089-11	RES-CHIP	47K	5%	1/10W
R1021	1-216-298-00	METAL CHIP	2.2	5%	1/10W
R1034	1-216-061-00	RES-CHIP	3.3K	5%	1/10W
R1042	1-216-025-11	RES-CHIP	100	5%	1/10W
R1043	1-216-025-11	RES-CHIP	100	5%	1/10W
R1044	1-216-025-11	RES-CHIP	100	5%	1/10W
R1045	1-216-025-11	RES-CHIP	100	5%	1/10W
R1046	1-216-025-11	RES-CHIP	100	5%	1/10W
R1047	1-216-069-00	METAL CHIP	6.8K	5%	1/10W
R1048	1-216-069-00	METAL CHIP	6.8K	5%	1/10W
R1049	1-216-073-11	RES-CHIP	10K	5%	1/10W
R1050	1-216-073-11	RES-CHIP	10K	5%	1/10W
R1051	1-216-045-00	METAL CHIP	680	5%	1/10W
R1052	1-216-049-11	RES-CHIP	1K	5%	1/10W
R1053	1-216-053-00	METAL CHIP	1.5K	5%	1/10W
R1054	1-216-061-00	RES-CHIP	3.3K	5%	1/10W
R1061	1-216-025-11	RES-CHIP	100	5%	1/10W
R1062	1-216-025-11	RES-CHIP	100	5%	1/10W
R1068	1-216-073-11	RES-CHIP	10K	5%	1/10W
R1071	1-216-073-11	RES-CHIP	10K	5%	1/10W
R1072	1-216-073-11	RES-CHIP	10K	5%	1/10W
R1073	1-216-073-11	RES-CHIP	10K	5%	1/10W
R1074	1-216-073-11	RES-CHIP	10K	5%	1/10W
R1075	1-216-073-11	RES-CHIP	10K	5%	1/10W
R1076	1-216-073-11	RES-CHIP	10K	5%	1/10W
R1077	1-216-073-11	RES-CHIP	10K	5%	1/10W
R1078	1-216-073-11	RES-CHIP	10K	5%	1/10W
R1080	1-216-073-11	RES-CHIP	10K	5%	1/10W
R1081	1-216-073-11	RES-CHIP	10K	5%	1/10W
R1082	1-216-073-11	RES-CHIP	10K	5%	1/10W
R1090	1-216-073-11	RES-CHIP	10K	5%	1/10W
R1091	1-216-073-11	RES-CHIP	10K	5%	1/10W
R1092	1-216-073-11	RES-CHIP	10K	5%	1/10W
		< SWITCH >			
S1001	1-554-303-21	SWITCH, TACTILE (≙ OPEN/CLOSE)			
S1002	1-554-303-21	SWITCH, TACTILE (■)			
S1003	1-554-303-21	SWITCH, TACTILE (▶)			
S1004	1-554-303-21	SWITCH, TACTILE (❚❚)			
		< VIBRATOR >			
X1001	1-579-125-11	VIBRATOR, CERAMIC (8MHz)			

****

	1-681-800-11	HP BOARD			
		*********			
		< CAPACITOR >			
C480	1-163-141-00	CERAMIC CHIP	0.001uF	5%	50V
C481	1-163-141-00	CERAMIC CHIP	0.001uF	5%	50V
C482	1-165-319-11	CERAMIC CHIP	0.1uF		50V
		< CONNECTOR >			
* CN480	1-568-952-91	PIN, CONNECTOR (STRAIGHT) 3P			
		< JACK >			
J480	1-770-904-11	JACK (LARGE TYPE) (PHONES)			
		< COIL >			
L480	1-412-004-31	INDUCTOR	6.8uH		
L481	1-412-004-31	INDUCTOR	6.8uH		
L482	1-412-004-31	INDUCTOR	6.8uH		
		< VARIABLE RESISTOR >			
RV480	1-227-403-11	RES, VAR, CARBON 1K/1K (PHONE LEVEL)			

****

	1-681-772-11	IC-1 BOARD			
		**********			
		< CAPACITOR >			
C416	1-128-196-11	ELECT	4.7uF	20%	63V
C417	1-128-196-11	ELECT	4.7uF	20%	63V
		< CONNECTOR >			
* CN412	1-564-506-11	PLUG, CONNECTOR 3P			
		< IC >			
IC410	8-759-394-35	IC BA12T			

****

IC-2 | JOG | KEY | LOADING MOTOR | MAIN

Ref. No.	Part No.	Description			Remark
	1-681-773-11	IC-2 BOARD			
		**********			
		< CAPACITOR >			
C426	1-128-196-11	ELECT	4.7uF	20%	63V
C427	1-128-196-11	ELECT	4.7uF	20%	63V
		< CONNECTOR >			
* CN423	1-564-506-11	PLUG, CONNECTOR 3P			
		< IC >			
IC420	8-759-445-59	IC BA033T			
**********					
	1-679-083-11	JOG BOARD			
		**********			
		< RELAY >			
RY1001	1-475-006-11	ENCODER, ROTARY (⏮ AMS ⏭, PUSH ENTER)			
**********					
	1-679-082-11	KEY BOARD			
		**********			
		< CONNECTOR >			
CN1004	1-793-674-21	CONNECTOR, BOARD TO BOARD 7P			
		< RESISTOR >			
R1055	1-216-045-00	METAL CHIP	680	5%	1/10W
R1056	1-216-049-11	RES-CHIP	1K	5%	1/10W
R1057	1-216-053-00	METAL CHIP	1.5K	5%	1/10W
R1063	1-216-029-00	METAL CHIP	150	5%	1/10W
R1064	1-216-029-00	METAL CHIP	150	5%	1/10W
		< SWITCH >			
S1005	1-570-101-51	SWITCH, KEY BOARD (SACD/CD)			
S1006	1-554-303-21	SWITCH, TACTILE (TIME/TEXT)			
S1007	1-570-101-51	SWITCH, KEY BOARD (MENU)			
S1008	1-554-303-21	SWITCH, TACTILE (MULTI/2CH)			
**********					
*	1-641-765-13	LOADING MOTOR BOARD			
		**********			
**********					
	A-4726-087-A	MAIN BOARD, COMPLETE			
		**********			
		< CAPACITOR >			
C506	1-107-826-11	CERAMIC CHIP	0.1uF	10%	16V
C507	1-165-176-11	CERAMIC CHIP	0.047uF	10%	16V
C508	1-165-176-11	CERAMIC CHIP	0.047uF	10%	16V
C509	1-107-826-11	CERAMIC CHIP	0.1uF	10%	16V
C510	1-107-826-11	CERAMIC CHIP	0.1uF	10%	16V
C511	1-107-826-11	CERAMIC CHIP	0.1uF	10%	16V
C513	1-115-156-11	CERAMIC CHIP	1uF		10V
C516	1-162-966-11	CERAMIC CHIP	0.0022uF	10%	50V
C517	1-125-822-11	TANTALUM CHIP	10uF	20%	10V
C518	1-164-156-11	CERAMIC CHIP	0.1uF		25V
C519	1-164-156-11	CERAMIC CHIP	0.1uF		25V
C520	1-126-395-11	ELECT	22uF	20%	16V
C521	1-162-965-11	CERAMIC CHIP	0.0015uF	10%	50V
C523	1-162-965-11	CERAMIC CHIP	0.0015uF	10%	50V
C525	1-107-826-11	CERAMIC CHIP	0.1uF	10%	16V
C526	1-107-826-11	CERAMIC CHIP	0.1uF	10%	16V
C527	1-164-739-11	CERAMIC CHIP	560PF	5%	50V
C528	1-125-822-11	TANTALUM CHIP	10uF	20%	10V
C529	1-164-739-11	CERAMIC CHIP	560PF	5%	50V
C530	1-107-826-11	CERAMIC CHIP	0.1uF	10%	16V
C531	1-165-176-11	CERAMIC CHIP	0.047uF	10%	16V
C532	1-107-826-11	CERAMIC CHIP	0.1uF	10%	16V
C533	1-162-966-11	CERAMIC CHIP	0.0022uF	10%	50V
C534	1-162-970-11	CERAMIC CHIP	0.01uF	10%	25V
C535	1-162-966-11	CERAMIC CHIP	0.0022uF	10%	50V
C536	1-125-891-11	CERAMIC CHIP	0.47uF	10%	10V
C539	1-107-826-11	CERAMIC CHIP	0.1uF	10%	16V
C541	1-107-826-11	CERAMIC CHIP	0.1uF	10%	16V
C542	1-125-891-11	CERAMIC CHIP	0.47uF	10%	10V
C543	1-164-156-11	CERAMIC CHIP	0.1uF		25V
C544	1-107-826-11	CERAMIC CHIP	0.1uF	10%	16V
C545	1-125-822-11	TANTALUM CHIP	10uF	20%	10V
C547	1-164-156-11	CERAMIC CHIP	0.1uF		25V
C548	1-162-970-11	CERAMIC CHIP	0.01uF	10%	25V
C549	1-107-826-11	CERAMIC CHIP	0.1uF	10%	16V
C550	1-162-963-11	CERAMIC CHIP	680PF	10%	50V
C551	1-125-891-11	CERAMIC CHIP	0.47uF	10%	10V
C553	1-162-970-11	CERAMIC CHIP	0.01uF	10%	25V
C554	1-107-826-11	CERAMIC CHIP	0.1uF	10%	16V
C555	1-162-963-11	CERAMIC CHIP	680PF	10%	50V
C556	1-125-822-11	TANTALUM CHIP	10uF	20%	10V
C558	1-162-963-11	CERAMIC CHIP	680PF	10%	50V
C559	1-107-826-11	CERAMIC CHIP	0.1uF	10%	16V
C560	1-162-965-11	CERAMIC CHIP	0.0015uF	10%	50V
C561	1-115-156-11	CERAMIC CHIP	1uF		10V
C562	1-162-963-11	CERAMIC CHIP	680PF	10%	50V
C563	1-162-927-11	CERAMIC CHIP	100PF	5%	50V
C565	1-107-826-11	CERAMIC CHIP	0.1uF	10%	16V
C567	1-115-156-11	CERAMIC CHIP	1uF		10V
C568	1-125-822-11	TANTALUM CHIP	10uF	20%	10V
C569	1-164-156-11	CERAMIC CHIP	0.1uF		25V
C570	1-125-822-11	TANTALUM CHIP	10uF	20%	10V
C572	1-115-156-11	CERAMIC CHIP	1uF		10V
C573	1-162-927-11	CERAMIC CHIP	100PF	5%	50V
C577	1-162-970-11	CERAMIC CHIP	0.01uF	10%	25V
C579	1-107-826-11	CERAMIC CHIP	0.1uF	10%	16V
C582	1-107-826-11	CERAMIC CHIP	0.1uF	10%	16V
C583	1-107-826-11	CERAMIC CHIP	0.1uF	10%	16V
C584	1-126-395-11	ELECT	22uF	20%	16V
C587	1-164-156-11	CERAMIC CHIP	0.1uF		25V
C588	1-162-966-11	CERAMIC CHIP	0.0022uF	10%	50V
C589	1-162-966-11	CERAMIC CHIP	0.0022uF	10%	50V
C590	1-162-964-11	CERAMIC CHIP	0.001uF	10%	50V
C591	1-125-822-11	TANTALUM CHIP	10uF	20%	10V
C592	1-125-822-11	TANTALUM CHIP	10uF	20%	10V
C701	1-125-822-11	TANTALUM CHIP	10uF	20%	10V

MAIN

Ref. No.	Part No.	Description			Remark
C702	1-125-822-11	TANTALUM CHIP	10uF	20%	10V
C704	1-115-156-11	CERAMIC CHIP	1uF		10V
C705	1-115-156-11	CERAMIC CHIP	1uF		10V
C706	1-115-156-11	CERAMIC CHIP	1uF		10V
C707	1-162-921-11	CERAMIC CHIP	33PF	5%	50V
C708	1-162-964-11	CERAMIC CHIP	0.001uF	10%	50V
C709	1-115-156-11	CERAMIC CHIP	1uF		10V
C711	1-162-970-11	CERAMIC CHIP	0.01uF	10%	25V
C712	1-164-816-11	CERAMIC CHIP	220PF	2%	50V
C713	1-164-156-11	CERAMIC CHIP	0.1uF		25V
C714	1-115-156-11	CERAMIC CHIP	1uF		10V
C715	1-162-967-11	CERAMIC CHIP	0.0033uF	10%	50V
C716	1-125-891-11	CERAMIC CHIP	0.47uF	10%	10V
C717	1-162-970-11	CERAMIC CHIP	0.01uF	10%	25V
C718	1-164-156-11	CERAMIC CHIP	0.1uF		25V
C720	1-107-826-11	CERAMIC CHIP	0.1uF	10%	16V
C721	1-164-156-11	CERAMIC CHIP	0.1uF		25V
C722	1-164-156-11	CERAMIC CHIP	0.1uF		25V
C723	1-164-156-11	CERAMIC CHIP	0.1uF		25V
C724	1-115-156-11	CERAMIC CHIP	1uF		10V
C725	1-164-156-11	CERAMIC CHIP	0.1uF		25V
C726	1-115-156-11	CERAMIC CHIP	1uF		10V
C727	1-125-822-11	TANTALUM CHIP	10uF	20%	10V
C728	1-107-826-11	CERAMIC CHIP	0.1uF	10%	16V
C729	1-125-822-11	TANTALUM CHIP	10uF	20%	10V
C730	1-164-156-11	CERAMIC CHIP	0.1uF		25V
C731	1-164-156-11	CERAMIC CHIP	0.1uF		25V
C740	1-164-156-11	CERAMIC CHIP	0.1uF		25V
C741	1-164-156-11	CERAMIC CHIP	0.1uF		25V
C742	1-164-156-11	CERAMIC CHIP	0.1uF		25V
C743	1-164-156-11	CERAMIC CHIP	0.1uF		25V
C744	1-164-156-11	CERAMIC CHIP	0.1uF		25V
C745	1-164-156-11	CERAMIC CHIP	0.1uF		25V
C752	1-115-156-11	CERAMIC CHIP	1uF		10V
C760	1-164-156-11	CERAMIC CHIP	0.1uF		25V
C761	1-164-156-11	CERAMIC CHIP	0.1uF		25V
C762	1-164-156-11	CERAMIC CHIP	0.1uF		25V
C763	1-164-156-11	CERAMIC CHIP	0.1uF		25V
C764	1-164-156-11	CERAMIC CHIP	0.1uF		25V
C765	1-164-156-11	CERAMIC CHIP	0.1uF		25V
C766	1-162-927-11	CERAMIC CHIP	100PF	5%	50V
C767	1-164-156-11	CERAMIC CHIP	0.1uF		25V
C768	1-164-156-11	CERAMIC CHIP	0.1uF		25V
C769	1-164-156-11	CERAMIC CHIP	0.1uF		25V
C770	1-164-156-11	CERAMIC CHIP	0.1uF		25V
C771	1-165-176-11	CERAMIC CHIP	0.047uF	10%	16V
C772	1-164-156-11	CERAMIC CHIP	0.1uF		25V
C773	1-125-891-11	CERAMIC CHIP	0.47uF	10%	10V
C774	1-162-968-11	CERAMIC CHIP	0.0047uF	10%	50V
C775	1-164-156-11	CERAMIC CHIP	0.1uF		25V
C776	1-115-156-11	CERAMIC CHIP	1uF		10V
C777	1-115-156-11	CERAMIC CHIP	1uF		10V
C778	1-115-156-11	CERAMIC CHIP	1uF		10V
C779	1-125-822-11	TANTALUM CHIP	10uF	20%	10V
C780	1-125-822-11	TANTALUM CHIP	10uF	20%	10V
C781	1-125-822-11	TANTALUM CHIP	10uF	20%	10V
C790	1-126-204-11	ELECT CHIP	47uF	20%	16V
C791	1-126-206-11	ELECT CHIP	100uF	20%	6.3V
C792	1-126-206-11	ELECT CHIP	100uF	20%	6.3V
C793	1-126-246-11	ELECT CHIP	220uF	20%	4V
C794	1-126-246-11	ELECT CHIP	220uF	20%	4V
C795	1-126-206-11	ELECT CHIP	100uF	20%	6.3V
C796	1-115-156-11	CERAMIC CHIP	1uF		10V
C797	1-127-745-21	ELECT CHIP	22uF	20%	6.3V
C800	1-164-156-11	CERAMIC CHIP	0.1uF		25V
C802	1-125-822-11	TANTALUM CHIP	10uF	20%	10V
C803	1-164-156-11	CERAMIC CHIP	0.1uF		25V
C804	1-164-156-11	CERAMIC CHIP	0.1uF		25V
C807	1-162-970-11	CERAMIC CHIP	0.01uF	10%	25V
C808	1-162-921-11	CERAMIC CHIP	33PF	5%	50V
C809	1-125-822-11	TANTALUM CHIP	10uF	20%	10V
C810	1-162-970-11	CERAMIC CHIP	0.01uF	10%	25V
C811	1-164-156-11	CERAMIC CHIP	0.1uF		25V
C812	1-164-156-11	CERAMIC CHIP	0.1uF		25V
C813	1-164-156-11	CERAMIC CHIP	0.1uF		25V
C815	1-164-156-11	CERAMIC CHIP	0.1uF		25V
C817	1-164-156-11	CERAMIC CHIP	0.1uF		25V
C818	1-164-156-11	CERAMIC CHIP	0.1uF		25V
C819	1-164-156-11	CERAMIC CHIP	0.1uF		25V
C837	1-164-156-11	CERAMIC CHIP	0.1uF		25V
C838	1-164-156-11	CERAMIC CHIP	0.1uF		25V
C839	1-164-156-11	CERAMIC CHIP	0.1uF		25V
C840	1-125-822-11	TANTALUM CHIP	10uF	20%	10V
C841	1-125-822-11	TANTALUM CHIP	10uF	20%	10V
C842	1-115-156-11	CERAMIC CHIP	1uF		10V
C843	1-115-156-11	CERAMIC CHIP	1uF		10V
C846	1-126-204-11	ELECT CHIP	47uF	20%	16V
C847	1-115-156-11	CERAMIC CHIP	1uF		10V
C848	1-164-156-11	CERAMIC CHIP	0.1uF		25V
C849	1-164-156-11	CERAMIC CHIP	0.1uF		25V
C850	1-162-945-11	CERAMIC CHIP	22PF	5%	50V
C851	1-162-945-11	CERAMIC CHIP	22PF	5%	50V
C852	1-162-945-11	CERAMIC CHIP	22PF	5%	50V
C854	1-115-156-11	CERAMIC CHIP	1uF		10V
C855	1-115-156-11	CERAMIC CHIP	1uF		10V
C856	1-164-156-11	CERAMIC CHIP	0.1uF		25V
C857	1-164-156-11	CERAMIC CHIP	0.1uF		25V
C858	1-126-204-11	ELECT CHIP	47uF	20%	16V
C860	1-115-156-11	CERAMIC CHIP	1uF		10V
C861	1-115-156-11	CERAMIC CHIP	1uF		10V
C865	1-164-156-11	CERAMIC CHIP	0.1uF		25V
C866	1-164-156-11	CERAMIC CHIP	0.1uF		25V
C867	1-164-156-11	CERAMIC CHIP	0.1uF		25V
C870	1-164-677-11	CERAMIC CHIP	0.033uF	10%	16V
C871	1-164-156-11	CERAMIC CHIP	0.1uF		25V
C872	1-162-964-11	CERAMIC CHIP	0.001uF	10%	50V
C901	1-125-822-11	TANTALUM CHIP	10uF	20%	10V
C902	1-164-156-11	CERAMIC CHIP	0.1uF		25V
C903	1-125-822-11	TANTALUM CHIP	10uF	20%	10V
C904	1-164-156-11	CERAMIC CHIP	0.1uF		25V
C905	1-164-156-11	CERAMIC CHIP	0.1uF		25V
C906	1-164-156-11	CERAMIC CHIP	0.1uF		25V
C907	1-162-970-11	CERAMIC CHIP	0.01uF	10%	25V
C908	1-162-970-11	CERAMIC CHIP	0.01uF	10%	25V
C909	1-162-927-11	CERAMIC CHIP	100PF	5%	50V

MAIN

Ref. No.	Part No.	Description			Remark
C910	1-162-970-11	CERAMIC CHIP	0.01uF	10%	25V
C911	1-117-370-11	CERAMIC CHIP	10uF		10V
C913	1-164-156-11	CERAMIC CHIP	0.1uF		25V
C914	1-125-822-11	TANTALUM CHIP	10uF	20%	10V
C915	1-164-156-11	CERAMIC CHIP	0.1uF		25V
C916	1-164-156-11	CERAMIC CHIP	0.1uF		25V
C917	1-164-156-11	CERAMIC CHIP	0.1uF		25V
C918	1-164-156-11	CERAMIC CHIP	0.1uF		25V
C920	1-164-156-11	CERAMIC CHIP	0.1uF		25V
C921	1-162-970-11	CERAMIC CHIP	0.01uF	10%	25V
C923	1-115-156-11	CERAMIC CHIP	1uF		10V
C924	1-162-970-11	CERAMIC CHIP	0.01uF	10%	25V
C926	1-164-156-11	CERAMIC CHIP	0.1uF		25V
C927	1-164-156-11	CERAMIC CHIP	0.1uF		25V
C928	1-125-822-11	TANTALUM CHIP	10uF	20%	10V
C950	1-164-156-11	CERAMIC CHIP	0.1uF		25V
C951	1-164-156-11	CERAMIC CHIP	0.1uF		25V
C983	1-162-970-11	CERAMIC CHIP	0.01uF	10%	25V
C990	1-107-826-11	CERAMIC CHIP	0.1uF	10%	16V
C1500	1-164-156-11	CERAMIC CHIP	0.1uF		25V
C1501	1-115-156-11	CERAMIC CHIP	1uF		10V
C1502	1-164-156-11	CERAMIC CHIP	0.1uF		25V
C1503	1-115-156-11	CERAMIC CHIP	1uF		10V
C1504	1-115-156-11	CERAMIC CHIP	1uF		10V
C1505	1-115-156-11	CERAMIC CHIP	1uF		10V
C1506	1-115-156-11	CERAMIC CHIP	1uF		10V
C1507	1-162-921-11	CERAMIC CHIP	33PF	5%	50V
C1508	1-125-822-11	TANTALUM CHIP	10uF	20%	10V
C1509	1-126-246-11	ELECT CHIP	220uF	20%	4V
C1530	1-115-156-11	CERAMIC CHIP	1uF		10V
		< CONNECTOR >			
CN503	1-784-883-21	CONNECTOR, FFC (LIF (NON-ZIF)) 35P			
CN701	1-794-606-41	PIN, CONNECTOR (PC BPARD 9P			
CN801	1-774-731-21	PIN, CONNECTOR (PC BOARD) 5P			
CN901	1-784-871-21	CONNECTOR, FFC (LIF (NON-ZIF)) 19P			
CN902	1-784-871-21	CONNECTOR, FFC (LIF (NON-ZIF)) 19P			
CN903	1-794-708-11	PIN, CONNECTOR (PC BOARD) 7P			
CN907	1-774-653-41	PIN, CONNECTOR (PC BOARD) 3P			
		< DIODE >			
D903	8-719-049-09	DIODE 1SS367-T3SONY			
D904	8-719-049-09	DIODE 1SS367-T3SONY			
D905	8-719-049-09	DIODE 1SS367-T3SONY			
		< FERRITE BEAD/RESISTOR >			
FB701	1-469-835-21	FERRITE			
FB702	1-469-835-21	FERRITE			
FB703	1-500-283-11	FERRITE			
FB704	1-500-283-11	FERRITE			
FB705	1-469-835-21	FERRITE			
FB706	1-469-835-21	FERRITE			
FB707	1-500-283-11	FERRITE			
FB708	1-500-283-11	FERRITE			
FB709	1-500-283-11	FERRITE			
FB710	1-500-283-11	FERRITE			
FB751	1-500-283-11	FERRITE			
FB752	1-500-283-11	FERRITE			
FB753	1-500-283-11	FERRITE			
FB754	1-500-283-11	FERRITE			
FB755	1-500-283-11	FERRITE			
FB756	1-500-283-11	FERRITE			
FB801	1-500-283-11	FERRITE			
FB802	1-500-283-11	FERRITE			
FB803	1-500-283-11	FERRITE			
FB804	1-500-283-11	FERRITE			
FB1501	1-469-835-21	FERRITE			
FB1502	1-469-835-21	FERRITE			
FB1503	1-216-864-11	METAL CHIP	0	5%	1/16W
		< EMI FILTER >			
FL501	1-234-177-21	FILTER, CHIP EMI			
FL502	1-234-177-21	FILTER, CHIP EMI			
FL701	1-234-177-21	FILTER, CHIP EMI			
FL702	1-234-177-21	FILTER, CHIP EMI			
FL703	1-234-177-21	FILTER, CHIP EMI			
FL704	1-234-177-21	FILTER, CHIP EMI			
FL705	1-234-177-21	FILTER, CHIP EMI			
FL706	1-234-177-21	FILTER, CHIP EMI			
FL750	1-233-893-21	FILTER, CHIP EMI			
FL751	1-234-177-21	FILTER, CHIP EMI			
FL752	1-234-177-21	FILTER, CHIP EMI			
FL753	1-234-177-21	FILTER, CHIP EMI			
FL754	1-234-177-21	FILTER, CHIP EMI			
FL807	1-234-177-21	FILTER, CHIP EMI			
FL808	1-234-177-21	FILTER, CHIP EMI			
FL810	1-234-177-21	FILTER, CHIP EMI			
FL811	1-234-177-21	FILTER, CHIP EMI			
FL812	1-234-177-21	FILTER, CHIP EMI			
FL813	1-234-177-21	FILTER, CHIP EMI			
FL901	1-234-177-21	FILTER, CHIP EMI			
FL902	1-234-177-21	FILTER, CHIP EMI			
FL904	1-234-177-21	FILTER, CHIP EMI			
FL906	1-234-177-21	FILTER, CHIP EMI			
FL908	1-234-177-21	FILTER, CHIP EMI			
FL1501	1-234-177-21	FILTER, CHIP EMI			
		< IC >			
IC502	8-759-567-26	IC BA5983FP-E2			
IC503	8-759-701-40	IC NJM3404AM-T1			
IC504	8-759-473-95	IC uPC2905T-E1			
IC509	8-752-397-42	IC CXD3008Q			
IC512	8-759-490-71	IC BA5912AFP-YE2			
IC701	8-752-414-94	IC CXD1882R-1			
IC702	8-759-637-50	IC TA48M025F (TE16L)			
IC703	8-759-701-40	IC NJM3404AM-T1			
IC706	8-759-543-83	IC GM71VS18163CLT-6TR			
IC708	8-759-701-40	IC NJM3404AM-T1			
IC801	8-752-407-50	IC CXD2752R			
IC803	8-759-833-14	IC CXD9647R			
IC808	8-759-573-19	IC MT48LC1M16A1TG-7S			
IC811	8-759-549-25	IC SN74LVU04APWR			
IC812	8-759-549-15	IC SN74LV245APWR			
IC813	8-759-549-15	IC SN74LV245APWR			
IC814	8-759-649-33	IC SN74AHCT1G08DCKR			

MAIN

Ref. No.	Part No.	Description			Remark
IC901	8-752-920-81	IC CXP973F064R-1			
IC902	8-752-392-03	IC CXD1095BR			
IC903	8-759-487-04	IC BR24C02F-E2			
IC904	8-759-685-33	IC BU2500FV-E2			
IC905	8-759-636-64	IC M51957BFP-600C			
IC906	8-759-645-76	IC TC74VHCT32AFT			
		< COIL >			
L801	1-410-369-11	INDUCTOR CHIP 1uH			
L802	1-410-369-11	INDUCTOR CHIP 1uH			
L803	1-410-369-11	INDUCTOR CHIP 1uH			
		< RESISTOR >			
R501	1-216-833-11	METAL CHIP	10K	5%	1/16W
R502	1-216-833-11	METAL CHIP	10K	5%	1/16W
R509	1-218-736-11	METAL CHIP	68K	0.5%	1/16W
R510	1-218-736-11	METAL CHIP	68K	0.5%	1/16W
R511	1-218-740-11	METAL CHIP	100K	0.5%	1/16W
R512	1-218-740-11	METAL CHIP	100K	0.5%	1/16W
R513	1-216-797-11	METAL CHIP	10	5%	1/16W
R515	1-216-864-11	METAL CHIP	0	5%	1/16W
R516	1-216-797-11	METAL CHIP	10	5%	1/16W
R518	1-216-797-11	METAL CHIP	10	5%	1/16W
R520	1-216-864-11	METAL CHIP	0	5%	1/16W
R522	1-216-864-11	METAL CHIP	0	5%	1/16W
R523	1-216-797-11	METAL CHIP	10	5%	1/16W
R529	1-218-748-11	METAL CHIP	220K	0.5%	1/16W
R530	1-218-748-11	METAL CHIP	220K	0.5%	1/16W
R534	1-218-704-11	METAL CHIP	3.3K	0.5%	1/16W
R538	1-218-740-11	METAL CHIP	100K	0.5%	1/16W
R540	1-216-833-11	METAL CHIP	10K	5%	1/16W
R541	1-218-740-11	METAL CHIP	100K	0.5%	1/16W
R544	1-218-740-11	METAL CHIP	100K	0.5%	1/16W
R545	1-218-740-11	METAL CHIP	100K	0.5%	1/16W
R554	1-216-827-11	METAL CHIP	3.3K	5%	1/16W
R555	1-218-704-11	METAL CHIP	3.3K	0.5%	1/16W
R556	1-216-827-11	METAL CHIP	3.3K	5%	1/16W
R558	1-216-841-11	METAL CHIP	47K	5%	1/16W
R559	1-216-797-11	METAL CHIP	10	5%	1/16W
R560	1-216-821-11	METAL CHIP	1K	5%	1/16W
R561	1-216-821-11	METAL CHIP	1K	5%	1/16W
R562	1-216-821-11	METAL CHIP	1K	5%	1/16W
R563	1-216-797-11	METAL CHIP	10	5%	1/16W
R569	1-216-864-11	METAL CHIP	0	5%	1/16W
R572	1-216-797-11	METAL CHIP	10	5%	1/16W
R573	1-216-797-11	METAL CHIP	10	5%	1/16W
R577	1-216-864-11	METAL CHIP	0	5%	1/16W
R578	1-216-864-11	METAL CHIP	0	5%	1/16W
R581	1-216-833-11	METAL CHIP	10K	5%	1/16W
R582	1-216-833-11	METAL CHIP	10K	5%	1/16W
R584	1-218-728-11	METAL CHIP	33K	0.5%	1/16W
R586	1-216-864-11	METAL CHIP	0	5%	1/16W
R588	1-218-716-11	METAL CHIP	10K	0.5%	1/16W
R589	1-218-728-11	METAL CHIP	33K	0.5%	1/16W
R590	1-218-716-11	METAL CHIP	10K	0.5%	1/16W
R591	1-218-702-11	METAL CHIP	2.7K	0.5%	1/16W
R592	1-218-708-11	METAL CHIP	4.7K	0.5%	1/16W
R593	1-218-740-11	METAL CHIP	100K	0.5%	1/16W
R594	1-218-728-11	METAL CHIP	33K	0.5%	1/16W
R595	1-218-708-11	METAL CHIP	4.7K	0.5%	1/16W
R596	1-216-864-11	METAL CHIP	0	5%	1/16W
R597	1-218-716-11	METAL CHIP	10K	0.5%	1/16W
R599	1-218-702-11	METAL CHIP	2.7K	0.5%	1/16W
R600	1-216-864-11	METAL CHIP	0	5%	1/16W
R601	1-218-724-11	METAL CHIP	22K	0.5%	1/16W
R602	1-218-708-11	METAL CHIP	4.7K	0.5%	1/16W
R603	1-218-704-11	METAL CHIP	3.3K	0.5%	1/16W
R604	1-218-692-11	METAL CHIP	1K	0.5%	1/16W
R605	1-216-864-11	METAL CHIP	0	5%	1/16W
R606	1-216-841-11	METAL CHIP	47K	5%	1/16W
R607	1-218-708-11	METAL CHIP	4.7K	0.5%	1/16W
R608	1-218-716-11	METAL CHIP	10K	0.5%	1/16W
R609	1-216-864-11	METAL CHIP	0	5%	1/16W
R610	1-216-864-11	METAL CHIP	0	5%	1/16W
R611	1-218-724-11	METAL CHIP	22K	0.5%	1/16W
R612	1-216-864-11	METAL CHIP	0	5%	1/16W
R613	1-216-857-11	METAL CHIP	1M	5%	1/16W
R617	1-216-857-11	METAL CHIP	1M	5%	1/16W
R618	1-218-911-11	METAL CHIP	470K	0.5%	1/16W
R619	1-216-864-11	METAL CHIP	0	5%	1/16W
R622	1-216-864-11	METAL CHIP	0	5%	1/16W
R625	1-216-815-11	METAL CHIP	330	5%	1/16W
R629	1-216-864-11	METAL CHIP	0	5%	1/16W
R632	1-216-833-11	METAL CHIP	10K	5%	1/16W
R634	1-216-831-11	METAL CHIP	6.8K	5%	1/16W
R642	1-216-839-11	METAL CHIP	33K	5%	1/16W
R644	1-216-797-11	METAL CHIP	10	5%	1/16W
R645	1-216-797-11	METAL CHIP	10	5%	1/16W
R654	1-216-833-11	METAL CHIP	10K	5%	1/16W
R655	1-216-821-11	METAL CHIP	1K	5%	1/16W
R656	1-216-821-11	METAL CHIP	1K	5%	1/16W
R657	1-218-700-11	METAL CHIP	2.2K	0.5%	1/16W
R658	1-218-700-11	METAL CHIP	2.2K	0.5%	1/16W
R659	1-218-700-11	METAL CHIP	2.2K	0.5%	1/16W
R660	1-218-700-11	METAL CHIP	2.2K	0.5%	1/16W
R661	1-216-296-11	SHORT	0		
R670	1-216-833-11	METAL CHIP	10K	5%	1/16W
R671	1-216-833-11	METAL CHIP	10K	5%	1/16W
R672	1-216-833-11	METAL CHIP	10K	5%	1/16W
R674	1-216-821-11	METAL CHIP	1K	5%	1/16W
R675	1-216-821-11	METAL CHIP	1K	5%	1/16W
R701	1-218-748-11	METAL CHIP	220K	0.5%	1/16W
R702	1-218-740-11	METAL CHIP	100K	0.5%	1/16W
R703	1-218-740-11	METAL CHIP	100K	0.5%	1/16W
R704	1-218-748-11	METAL CHIP	220K	0.5%	1/16W
R705	1-218-740-11	METAL CHIP	100K	0.5%	1/16W
R706	1-218-740-11	METAL CHIP	100K	0.5%	1/16W
R707	1-218-668-11	METAL CHIP	100	0.5%	1/16W
R708	1-216-857-11	METAL CHIP	1M	5%	1/16W
R709	1-218-736-11	METAL CHIP	68K	0.5%	1/16W
R710	1-218-716-11	METAL CHIP	10K	0.5%	1/16W
R711	1-218-700-11	METAL CHIP	2.2K	0.5%	1/16W
R712	1-218-716-11	METAL CHIP	10K	0.5%	1/16W
R713	1-218-716-11	METAL CHIP	10K	0.5%	1/16W
R714	1-218-716-11	METAL CHIP	10K	0.5%	1/16W

MAIN

Ref. No.	Part No.	Description			Remark
R716	1-218-668-11	METAL CHIP	100	0.5%	1/16W
R717	1-218-740-11	METAL CHIP	100K	0.5%	1/16W
R718	1-218-716-11	METAL CHIP	10K	0.5%	1/16W
R719	1-218-692-11	METAL CHIP	1K	0.5%	1/16W
R720	1-216-821-11	METAL CHIP	1K	5%	1/16W
R721	1-218-728-11	METAL CHIP	33K	0.5%	1/16W
R724	1-218-692-11	METAL CHIP	1K	0.5%	1/16W
R725	1-218-716-11	METAL CHIP	10K	0.5%	1/16W
R726	1-218-740-11	METAL CHIP	100K	0.5%	1/16W
R727	1-218-704-11	METAL CHIP	3.3K	0.5%	1/16W
R728	1-218-716-11	METAL CHIP	10K	0.5%	1/16W
R729	1-216-864-11	METAL CHIP	0	5%	1/16W
R730	1-216-801-11	METAL CHIP	22	5%	1/16W
R731	1-216-801-11	METAL CHIP	22	5%	1/16W
R732	1-216-833-11	METAL CHIP	10K	5%	1/16W
R733	1-216-833-11	METAL CHIP	10K	5%	1/16W
R734	1-216-833-11	METAL CHIP	10K	5%	1/16W
R735	1-216-833-11	METAL CHIP	10K	5%	1/16W
R736	1-216-833-11	METAL CHIP	10K	5%	1/16W
R737	1-216-833-11	METAL CHIP	10K	5%	1/16W
R738	1-216-833-11	METAL CHIP	10K	5%	1/16W
R740	1-216-833-11	METAL CHIP	10K	5%	1/16W
R741	1-216-801-11	METAL CHIP	22	5%	1/16W
R742	1-216-801-11	METAL CHIP	22	5%	1/16W
R743	1-216-801-11	METAL CHIP	22	5%	1/16W
R744	1-216-801-11	METAL CHIP	22	5%	1/16W
R745	1-216-841-11	METAL CHIP	47K	5%	1/16W
R746	1-216-841-11	METAL CHIP	47K	5%	1/16W
R750	1-216-833-11	METAL CHIP	10K	5%	1/16W
R761	1-218-700-11	METAL CHIP	2.2K	0.5%	1/16W
R762	1-218-724-11	METAL CHIP	22K	0.5%	1/16W
R763	1-218-714-11	METAL CHIP	8.2K	0.5%	1/16W
R764	1-216-857-11	METAL CHIP	1M	5%	1/16W
R765	1-218-724-11	METAL CHIP	22K	0.5%	1/16W
R767	1-218-732-11	METAL CHIP	47K	0.5%	1/16W
R768	1-216-809-11	METAL CHIP	100	5%	1/16W
R769	1-218-700-11	METAL CHIP	2.2K	0.5%	1/16W
R770	1-216-864-11	METAL CHIP	0	5%	1/16W
R771	1-216-801-11	METAL CHIP	22	5%	1/16W
R772	1-216-801-11	METAL CHIP	22	5%	1/16W
R773	1-216-833-11	METAL CHIP	10K	5%	1/16W
R776	1-216-864-11	METAL CHIP	0	5%	1/16W
R778	1-218-740-11	METAL CHIP	100K	0.5%	1/16W
R780	1-216-864-11	METAL CHIP	0	5%	1/16W
R786	1-216-864-11	METAL CHIP	0	5%	1/16W
R800	1-216-829-11	METAL CHIP	4.7K	5%	1/16W
R818	1-216-864-11	METAL CHIP	0	5%	1/16W
R821	1-216-801-11	METAL CHIP	22	5%	1/16W
R822	1-216-801-11	METAL CHIP	22	5%	1/16W
R826	1-216-801-11	METAL CHIP	22	5%	1/16W
R827	1-216-809-11	METAL CHIP	100	5%	1/16W
R828	1-216-829-11	METAL CHIP	4.7K	5%	1/16W
R829	1-216-809-11	METAL CHIP	100	5%	1/16W
R830	1-216-829-11	METAL CHIP	4.7K	5%	1/16W
R831	1-216-839-11	METAL CHIP	33K	5%	1/16W
R839	1-216-829-11	METAL CHIP	4.7K	5%	1/16W
R842	1-216-833-11	METAL CHIP	10K	5%	1/16W
R847	1-216-801-11	METAL CHIP	22	5%	1/16W
R848	1-216-801-11	METAL CHIP	22	5%	1/16W
R849	1-216-801-11	METAL CHIP	22	5%	1/16W
R850	1-216-801-11	METAL CHIP	22	5%	1/16W
R853	1-216-813-11	METAL CHIP	220	5%	1/16W
R854	1-216-813-11	METAL CHIP	220	5%	1/16W
R855	1-216-813-11	METAL CHIP	220	5%	1/16W
R858	1-216-819-11	METAL CHIP	680	5%	1/16W
R859	1-216-819-11	METAL CHIP	680	5%	1/16W
R860	1-216-819-11	METAL CHIP	680	5%	1/16W
R861	1-216-813-11	METAL CHIP	220	5%	1/16W
R870	1-216-833-11	METAL CHIP	10K	5%	1/16W
R875	1-216-830-11	METAL CHIP	5.6K	5%	1/16W
R876	1-216-864-11	METAL CHIP	0	5%	1/16W
R882	1-216-833-11	METAL CHIP	10K	5%	1/16W
R883	1-216-833-11	METAL CHIP	10K	5%	1/16W
R884	1-216-833-11	METAL CHIP	10K	5%	1/16W
R885	1-216-833-11	METAL CHIP	10K	5%	1/16W
R886	1-216-833-11	METAL CHIP	10K	5%	1/16W
R887	1-216-833-11	METAL CHIP	10K	5%	1/16W
R888	1-216-833-11	METAL CHIP	10K	5%	1/16W
R889	1-216-833-11	METAL CHIP	10K	5%	1/16W
R900	1-216-809-11	METAL CHIP	100	5%	1/16W
R901	1-216-801-11	METAL CHIP	22	5%	1/16W
R902	1-216-801-11	METAL CHIP	22	5%	1/16W
R903	1-216-801-11	METAL CHIP	22	5%	1/16W
R904	1-216-801-11	METAL CHIP	22	5%	1/16W
R905	1-216-801-11	METAL CHIP	22	5%	1/16W
R906	1-216-801-11	METAL CHIP	22	5%	1/16W
R907	1-216-801-11	METAL CHIP	22	5%	1/16W
R908	1-216-801-11	METAL CHIP	22	5%	1/16W
R909	1-216-801-11	METAL CHIP	22	5%	1/16W
R911	1-216-864-11	METAL CHIP	0	5%	1/16W
R912	1-216-833-11	METAL CHIP	10K	5%	1/16W
R913	1-216-833-11	METAL CHIP	10K	5%	1/16W
R915	1-216-809-11	METAL CHIP	100	5%	1/16W
R916	1-216-821-11	METAL CHIP	1K	5%	1/16W
R917	1-216-821-11	METAL CHIP	1K	5%	1/16W
R919	1-216-801-11	METAL CHIP	22	5%	1/16W
R920	1-216-809-11	METAL CHIP	100	5%	1/16W
R921	1-216-809-11	METAL CHIP	100	5%	1/16W
R922	1-216-801-11	METAL CHIP	22	5%	1/16W
R925	1-216-809-11	METAL CHIP	100	5%	1/16W
R926	1-216-809-11	METAL CHIP	100	5%	1/16W
R928	1-216-809-11	METAL CHIP	100	5%	1/16W
R929	1-216-809-11	METAL CHIP	100	5%	1/16W
R930	1-216-809-11	METAL CHIP	100	5%	1/16W
R931	1-216-809-11	METAL CHIP	100	5%	1/16W
R932	1-216-809-11	METAL CHIP	100	5%	1/16W
R934	1-216-833-11	METAL CHIP	10K	5%	1/16W
R935	1-216-833-11	METAL CHIP	10K	5%	1/16W
R936	1-216-829-11	METAL CHIP	4.7K	5%	1/16W
R937	1-216-829-11	METAL CHIP	4.7K	5%	1/16W
R938	1-216-833-11	METAL CHIP	10K	5%	1/16W
R939	1-216-809-11	METAL CHIP	100	5%	1/16W
R940	1-216-809-11	METAL CHIP	100	5%	1/16W
R941	1-216-809-11	METAL CHIP	100	5%	1/16W
R942	1-216-809-11	METAL CHIP	100	5%	1/16W

MAIN POWER

Ref. No.	Part No.	Description			Remark
R943	1-216-809-11	METAL CHIP	100	5%	1/16W
R944	1-216-833-11	METAL CHIP	10K	5%	1/16W
R945	1-216-833-11	METAL CHIP	10K	5%	1/16W
R947	1-216-864-11	METAL CHIP	0	5%	1/16W
R948	1-218-720-11	METAL CHIP	15K	0.5%	1/16W
R949	1-218-720-11	METAL CHIP	15K	0.5%	1/16W
R950	1-216-833-11	METAL CHIP	10K	5%	1/16W
R951	1-216-821-11	METAL CHIP	1K	5%	1/16W
R952	1-216-827-11	METAL CHIP	3.3K	5%	1/16W
R953	1-216-833-11	METAL CHIP	10K	5%	1/16W
R954	1-216-833-11	METAL CHIP	10K	5%	1/16W
R955	1-216-801-11	METAL CHIP	22	5%	1/16W
R956	1-216-801-11	METAL CHIP	22	5%	1/16W
R957	1-216-801-11	METAL CHIP	22	5%	1/16W
R959	1-216-833-11	METAL CHIP	10K	5%	1/16W
R960	1-216-833-11	METAL CHIP	10K	5%	1/16W
R961	1-216-821-11	METAL CHIP	1K	5%	1/16W
R962	1-216-833-11	METAL CHIP	10K	5%	1/16W
R963	1-218-704-11	METAL CHIP	3.3K	0.5%	1/16W
R964	1-218-702-11	METAL CHIP	2.7K	0.5%	1/16W
R969	1-216-833-11	METAL CHIP	10K	5%	1/16W
R970	1-216-833-11	METAL CHIP	10K	5%	1/16W
R971	1-216-809-11	METAL CHIP	100	5%	1/16W
R975	1-216-833-11	METAL CHIP	10K	5%	1/16W
R976	1-216-833-11	METAL CHIP	10K	5%	1/16W
R978	1-216-833-11	METAL CHIP	10K	5%	1/16W
R979	1-216-833-11	METAL CHIP	10K	5%	1/16W
R980	1-216-833-11	METAL CHIP	10K	5%	1/16W
R981	1-216-833-11	METAL CHIP	10K	5%	1/16W
R983	1-216-821-11	METAL CHIP	1K	5%	1/16W
R988	1-216-864-11	METAL CHIP	0	5%	1/16W
R990	1-216-821-11	METAL CHIP	1K	5%	1/16W
R994	1-216-789-11	METAL CHIP	2.2	5%	1/16W
R998	1-216-864-11	METAL CHIP	0	5%	1/16W
R1501	1-216-821-11	METAL CHIP	1K	5%	1/16W
R1502	1-216-801-11	METAL CHIP	22	5%	1/16W
R1503	1-216-801-11	METAL CHIP	22	5%	1/16W
R1504	1-216-801-11	METAL CHIP	22	5%	1/16W
R1505	1-216-801-11	METAL CHIP	22	5%	1/16W
R1506	1-216-801-11	METAL CHIP	22	5%	1/16W
R1507	1-216-801-11	METAL CHIP	22	5%	1/16W
R1508	1-216-801-11	METAL CHIP	22	5%	1/16W
R1509	1-216-801-11	METAL CHIP	22	5%	1/16W
R1510	1-216-801-11	METAL CHIP	22	5%	1/16W
R1511	1-216-833-11	METAL CHIP	10K	5%	1/16W
R1512	1-216-864-11	METAL CHIP	0	5%	1/16W
R1514	1-216-864-11	METAL CHIP	0	5%	1/16W
R1517	1-216-809-11	METAL CHIP	100	5%	1/16W
R1519	1-216-864-11	METAL CHIP	0	5%	1/16W
R1521	1-216-864-11	METAL CHIP	0	5%	1/16W
R1524	1-216-833-11	METAL CHIP	10K	5%	1/16W
R1525	1-216-809-11	METAL CHIP	100	5%	1/16W
R1527	1-216-821-11	METAL CHIP	1K	5%	1/16W
R1528	1-216-833-11	METAL CHIP	10K	5%	1/16W
R1530	1-216-833-11	METAL CHIP	10K	5%	1/16W
R1531	1-216-843-11	METAL CHIP	68K	5%	1/16W
R1532	1-216-864-11	METAL CHIP	0	5%	1/16W
R1533	1-216-864-11	METAL CHIP	0	5%	1/16W

Ref. No.	Part No.	Description			Remark
R1534	1-216-833-11	METAL CHIP	10K	5%	1/16W
		< VIBRATOR >			
X901	1-781-945-21	VIBRATOR, CERAMIC (20MHz)			
**********					
	A-4726-080-A	POWER BOARD, COMPLETE			
		**********			
		< CAPACITOR >			
C400	1-128-562-11	ELECT	47uF	20%	100V
C401	1-128-562-11	ELECT	47uF	20%	100V
C402	1-136-816-11	FILM	0.0022uF	5%	100V
C403	1-136-816-11	FILM	0.0022uF	5%	100V
C410	1-163-141-00	CERAMIC CHIP	0.001uF	5%	50V
C411	1-135-698-11	ELECT	10000uF		16V
C412	1-128-196-11	ELECT	4.7uF	20%	63V
C413	1-135-748-11	ELECT	4700uF		35V
C414	1-135-748-11	ELECT	4700uF		35V
C415	1-136-816-11	FILM	0.0022uF	5%	100V
C420	1-163-141-00	CERAMIC CHIP	0.001uF	5%	50V
C421	1-119-815-21	ELECT	2200uF	20%	35V
C423	1-135-698-11	ELECT	10000uF		16V
C424	1-136-816-11	FILM	0.0022uF	5%	100V
C425	1-136-816-11	FILM	0.0022uF	5%	100V
C430	1-163-141-00	CERAMIC CHIP	0.001uF	5%	50V
C431	1-128-204-11	ELECT	470uF	20%	63V
C432	1-135-689-11	ELECT	6800uF		25V
C433	1-136-816-11	FILM	0.0022uF	5%	100V
C434	1-136-816-11	FILM	0.0022uF	5%	100V
C440	1-128-201-11	ELECT	100uF	20%	63V
C441	1-128-196-11	ELECT	4.7uF	20%	63V
C442	1-135-689-11	ELECT	6800uF		25V
C443	1-136-818-11	FILM	0.0047uF	5%	100V
C444	1-136-818-11	FILM	0.0047uF	5%	100V
C450	1-128-204-11	ELECT	470uF	20%	63V
C451	1-109-857-11	ELECT	47uF	20%	63V
C452	1-128-204-11	ELECT	470uF	20%	63V
C453	1-119-815-21	ELECT	2200uF	20%	35V
C454	1-136-818-11	FILM	0.0047uF	5%	100V
C455	1-128-204-11	ELECT	470uF	20%	63V
C456	1-109-857-11	ELECT	47uF	20%	63V
C457	1-128-204-11	ELECT	470uF	20%	63V
C458	1-119-815-21	ELECT	2200uF	20%	35V
C459	1-136-818-11	FILM	0.0047uF	5%	100V
C470	1-136-850-11	MYLAR	0.1uF	5%	63V
C476	1-125-853-21	FILM	470PF	5%	50V
		< CONNECTOR >			
CN400	1-568-955-11	PIN, CONNECTOR 6P			
CN401	1-564-510-11	PLUG (MICRO CONNECTOR) 6P			
CN410	1-506-468-11	PIN, CONNECTOR 3P			
CN420	1-568-955-11	PIN, CONNECTOR 6P			
CN422	1-691-768-11	PLUG (MICRO CONNECTOR) 6P			
CN440	1-506-469-11	PIN, CONNECTOR 4P			
CN451	1-691-771-11	PLUG (MICRO CONNECTOR) 9P			
CN452	1-691-765-11	PLUG (MICRO CONNECTOR) 3P			

POWER **R.CNTL** **RF**

Ref. No.	Part No.	Description	Remark
		< DIODE >	
D400	8-719-056-77	DIODE UDZ-TE-17-3.9B	
D401	8-719-083-67	DIODE UDZSTE-1720B	
D402	8-719-210-33	DIODE EC10DS2TE12L	
D403	8-719-210-33	DIODE EC10DS2TE12L	
D404	8-719-210-33	DIODE EC10DS2TE12L	
D405	8-719-210-33	DIODE EC10DS2TE12L	
D406	8-719-083-67	DIODE UDZSTE-1720B	
D410	8-719-210-39	DIODE EC10QS04-TE12L5	
D411	8-719-210-39	DIODE EC10QS04-TE12L5	
D412	8-719-210-39	DIODE EC10QS04-TE12L5	
D413	8-719-210-39	DIODE EC10QS04-TE12L5	
D414	8-719-210-39	DIODE EC10QS04-TE12L5	
D415	8-719-210-39	DIODE EC10QS04-TE12L5	
D420	8-719-210-39	DIODE EC10QS04-TE12L5	
D421	8-719-210-39	DIODE EC10QS04-TE12L5	
D422	8-719-210-39	DIODE EC10QS04-TE12L5	
D423	8-719-210-39	DIODE EC10QS04-TE12L5	
D430	8-719-210-39	DIODE EC10QS04-TE12L5	
D431	8-719-210-39	DIODE EC10QS04-TE12L5	
D432	8-719-210-39	DIODE EC10QS04-TE12L5	
D433	8-719-210-39	DIODE EC10QS04-TE12L5	
D440	8-719-210-39	DIODE EC10QS04-TE12L5	
D441	8-719-210-39	DIODE EC10QS04-TE12L5	
D442	8-719-210-39	DIODE EC10QS04-TE12L5	
D443	8-719-210-39	DIODE EC10QS04-TE12L5	
D450	8-719-210-39	DIODE EC10QS04-TE12L5	
D451	8-719-210-39	DIODE EC10QS04-TE12L5	
D453	8-719-210-39	DIODE EC10QS04-TE12L5	
D454	8-719-210-39	DIODE EC10QS04-TE12L5	
D455	8-719-210-39	DIODE EC10QS04-TE12L5	
D456	8-719-210-39	DIODE EC10QS04-TE12L5	
D458	8-719-210-39	DIODE EC10QS04-TE12L5	
D459	8-719-210-39	DIODE EC10QS04-TE12L5	
		< IC >	
IC430	8-759-450-47	IC BA05T	
IC440	8-759-450-50	IC BA08T	
IC450	8-759-231-58	IC M5F7812L	
IC455	8-759-245-86	IC M5F7912L	
		< COIL >	
L400	1-410-482-31	INDUCTOR 100uH	
L401	1-410-482-31	INDUCTOR 100uH	
L420	1-424-090-11	COIL, LINE FILTER	
L421	1-424-090-11	COIL, LINE FILTER	
L430	1-424-090-11	COIL, LINE FILTER	
L431	1-424-090-11	COIL, LINE FILTER	
L440	1-424-090-11	COIL, LINE FILTER	
L441	1-424-090-11	COIL, LINE FILTER	
L450	1-424-090-11	COIL, LINE FILTER	
L451	1-424-090-11	COIL, LINE FILTER	
L452	1-424-090-11	COIL, LINE FILTER	
L453	1-424-090-11	COIL, LINE FILTER	
L454	1-424-090-11	COIL, LINE FILTER	
L455	1-424-090-11	COIL, LINE FILTER	

Ref. No.	Part No.	Description	Remark
		< TRANSISTOR >	
Q400	8-729-209-71	TRANSISTOR 2SA1213O-TE12L	
		< RESISTOR >	
R400	1-216-089-11	RES-CHIP 47K 5% 1/10W	
R401	1-216-025-11	RES-CHIP 100 5% 1/10W	
R402	1-216-025-11	RES-CHIP 100 5% 1/10W	
R403	1-216-089-11	RES-CHIP 47K 5% 1/10W	
R404	1-216-061-00	RES-CHIP 3.3K 5% 1/10W	
⚠R405	1-212-881-11	FUSIBLE 100 5% 1/4W	
R406	1-216-081-00	METAL CHIP 22K 5% 1/10W	
R407	1-216-081-00	METAL CHIP 22K 5% 1/10W	
R410	1-216-081-00	METAL CHIP 22K 5% 1/10W	
R420	1-216-081-00	METAL CHIP 22K 5% 1/10W	
R430	1-216-081-00	METAL CHIP 22K 5% 1/10W	
R440	1-216-081-00	METAL CHIP 22K 5% 1/10W	
R470	1-216-013-00	METAL CHIP 33 5% 1/10W	
**********			
	1-679-084-11	R.CNTL BOARD **********	
		< CAPACITOR >	
C1022	1-107-725-11	CERAMIC CHIP 0.1uF 10% 16V	
		< CONNECTOR >	
* CN1006	1-568-941-11	PIN, CONNECTOR 3P	
		< IC >	
IC1003	8-749-923-80	IC GP1U90XB (REMOTE CONTROL RECEIVER)	
		< RESISTOR >	
R1035	1-216-025-11	RES-CHIP 100 5% 1/10W	
**********			
	A-4726-527-A	RF BOARD, COMPLETE **********	
		< CAPACITOR >	
C001	1-162-966-11	CERAMIC CHIP 0.0022uF 10% 50V	
C002	1-162-966-11	CERAMIC CHIP 0.0022uF 10% 50V	
C003	1-107-826-11	CERAMIC CHIP 0.1uF 10% 16V	
C004	1-115-156-11	CERAMIC CHIP 1uF 10V	
C005	1-128-993-21	ELECT CHIP 22uF 20% 10V	
C006	1-115-156-11	CERAMIC CHIP 1uF 10V	
C007	1-124-779-00	ELECT CHIP 10uF 20% 16V	
C008	1-162-966-11	CERAMIC CHIP 0.0022uF 10% 50V	
C009	1-162-966-11	CERAMIC CHIP 0.0022uF 10% 50V	
C010	1-162-966-11	CERAMIC CHIP 0.0022uF 10% 50V	
C011	1-162-966-11	CERAMIC CHIP 0.0022uF 10% 50V	
C012	1-164-172-11	CERAMIC CHIP 0.0056uF 10% 25V	
C013	1-164-172-11	CERAMIC CHIP 0.0056uF 10% 25V	
C014	1-124-779-00	ELECT CHIP 10uF 20% 16V	
C015	1-124-779-00	ELECT CHIP 10uF 20% 16V	
C016	1-164-218-11	CERAMIC CHIP 180PF 0.25PF 50V	
C017	1-162-919-11	CERAMIC CHIP 22PF 5% 50V	

The components identified by mark ⚠ or dotted line with mark ⚠ are critical for safety.
Replace only with part number specified.

RF

Ref. No.	Part No.	Description			Remark
C018	1-162-919-11	CERAMIC CHIP	22PF	5%	50V
C019	1-124-779-00	ELECT CHIP	10uF	20%	16V
C020	1-162-919-11	CERAMIC CHIP	22PF	5%	50V
C021	1-162-919-11	CERAMIC CHIP	22PF	5%	50V
C022	1-164-357-11	CERAMIC CHIP	0.001uF	5%	50V
C023	1-126-206-11	ELECT CHIP	100uF	20%	6.3V
C024	1-162-974-11	CERAMIC CHIP	0.01uF		50V
C025	1-164-156-11	CERAMIC CHIP	0.1uF		25V
C026	1-162-970-11	CERAMIC CHIP	0.01uF	10%	25V
C027	1-164-156-11	CERAMIC CHIP	0.1uF		25V
C028	1-128-993-21	ELECT CHIP	22uF	20%	10V
C029	1-124-779-00	ELECT CHIP	10uF	20%	16V
C030	1-128-993-21	ELECT CHIP	22uF	20%	10V
C031	1-107-826-11	CERAMIC CHIP	0.1uF	10%	16V
C032	1-107-826-11	CERAMIC CHIP	0.1uF	10%	16V
C033	1-128-993-21	ELECT CHIP	22uF	20%	10V
C034	1-124-779-00	ELECT CHIP	10uF	20%	16V
C036	1-164-156-11	CERAMIC CHIP	0.1uF		25V
C037	1-164-357-11	CERAMIC CHIP	0.001uF	5%	50V
C038	1-126-206-11	ELECT CHIP	100uF	20%	6.3V
C039	1-107-826-11	CERAMIC CHIP	0.1uF	10%	16V
C040	1-162-970-11	CERAMIC CHIP	0.01uF	10%	25V
C041	1-162-970-11	CERAMIC CHIP	0.01uF	10%	25V
C042	1-164-677-11	CERAMIC CHIP	0.033uF	10%	16V
C043	1-164-677-11	CERAMIC CHIP	0.033uF	10%	16V
C044	1-164-392-11	CERAMIC CHIP	390PF	5%	50V
C045	1-115-416-11	CERAMIC CHIP	0.001uF	5%	25V
C046	1-107-826-11	CERAMIC CHIP	0.1uF	10%	16V
C047	1-107-826-11	CERAMIC CHIP	0.1uF	10%	16V
C048	1-165-176-11	CERAMIC CHIP	0.047uF	10%	16V
C049	1-128-993-21	ELECT CHIP	22uF	20%	10V
C050	1-128-993-21	ELECT CHIP	22uF	20%	10V
C051	1-164-156-11	CERAMIC CHIP	0.1uF		25V
C052	1-164-156-11	CERAMIC CHIP	0.1uF		25V
C055	1-128-993-21	ELECT CHIP	22uF	20%	10V
C060	1-115-156-11	CERAMIC CHIP	1uF		10V
C064	1-164-156-11	CERAMIC CHIP	0.1uF		25V
C068	1-115-156-11	CERAMIC CHIP	1uF		10V
C069	1-115-156-11	CERAMIC CHIP	1uF		10V
C070	1-128-993-21	ELECT CHIP	22uF	20%	10V
C071	1-128-993-21	ELECT CHIP	22uF	20%	10V
C081	1-164-357-11	CERAMIC CHIP	0.001uF	5%	50V
C082	1-164-357-11	CERAMIC CHIP	0.001uF	5%	50V
C084	1-107-826-11	CERAMIC CHIP	0.1uF	10%	16V
C094	1-128-993-21	ELECT CHIP	22uF	20%	10V
C095	1-164-156-11	CERAMIC CHIP	0.1uF		25V
		< CONNECTOR >			
CN001	1-774-731-21	PIN, CONNECTOR (PC BOARD) 5P			
CN002	1-770-161-21	PIN, CONNECTOR (PC BOARD) 6P			
CN003	1-794-707-11	CONNECTOR, FFC/FPC 25P			
CN005	1-784-883-21	CONNECTOR, FFC (LIF (NON-ZIF)) 35P			
		< DIODE >			
D001	8-719-016-74	DIODE 1SS352-TPH3			
D002	8-719-016-74	DIODE 1SS352-TPH3			

Ref. No.	Part No.	Description			Remark
		< IC >			
IC001	8-752-403-50	IC CXD1881R			
IC004	8-759-058-45	IC NJM3403AV			
IC081	8-759-701-40	IC NJM3404AM-T1			
		< COIL >			
L001	1-412-031-11	INDUCTOR CHIP	47uH		
L002	1-412-031-11	INDUCTOR CHIP	47uH		
L003	1-412-031-11	INDUCTOR CHIP	47uH		
		< TRANSISTOR >			
Q001	8-729-805-25	TRANSISTOR	2SB1121-ST-TD		
Q002	8-729-805-25	TRANSISTOR	2SB1121-ST-TD		
Q003	8-729-805-25	TRANSISTOR	2SB1121-ST-TD		
Q005	8-729-820-90	TRANSISTOR	2SD1621-ST-TD		
		< RESISTOR >			
R001	1-216-864-11	METAL CHIP	0	5%	1/16W
R002	1-218-668-11	METAL CHIP	100	0.5%	1/16W
R003	1-216-839-11	METAL CHIP	33K	5%	1/16W
R005	1-216-864-11	METAL CHIP	0	5%	1/16W
R006	1-216-864-11	METAL CHIP	0	5%	1/16W
R007	1-216-864-11	METAL CHIP	0	5%	1/16W
R008	1-216-864-11	METAL CHIP	0	5%	1/16W
R011	1-216-864-11	METAL CHIP	0	5%	1/16W
R012	1-216-864-11	METAL CHIP	0	5%	1/16W
R013	1-216-864-11	METAL CHIP	0	5%	1/16W
R014	1-216-864-11	METAL CHIP	0	5%	1/16W
R015	1-216-803-11	METAL CHIP	33	5%	1/16W
R016	1-216-821-11	METAL CHIP	1K	5%	1/16W
R017	1-216-817-11	METAL CHIP	470	5%	1/16W
R018	1-216-821-11	METAL CHIP	1K	5%	1/16W
R019	1-216-803-11	METAL CHIP	33	5%	1/16W
R020	1-216-817-11	METAL CHIP	470	5%	1/16W
R021	1-219-570-11	RES-CHIP	10M	5%	1/16W
R022	1-218-718-11	METAL CHIP	12K	0.5%	1/16W
R023	1-216-864-11	METAL CHIP	0	5%	1/16W
R024	1-216-864-11	METAL CHIP	0	5%	1/16W
R025	1-216-864-11	METAL CHIP	0	5%	1/16W
R027	1-216-864-11	METAL CHIP	0	5%	1/16W
R029	1-216-841-11	METAL CHIP	47K	5%	1/16W
R030	1-216-864-11	METAL CHIP	0	5%	1/16W
R031	1-216-864-11	METAL CHIP	0	5%	1/16W
R032	1-216-864-11	METAL CHIP	0	5%	1/16W
R033	1-216-864-11	METAL CHIP	0	5%	1/16W
R036	1-216-833-11	METAL CHIP	10K	5%	1/16W
R044	1-216-832-11	METAL CHIP	8.2K	5%	1/16W
R046	1-218-668-11	METAL CHIP	100	0.5%	1/16W
R053	1-216-864-11	METAL CHIP	0	5%	1/16W
R054	1-216-864-11	METAL CHIP	0	5%	1/16W
R060	1-216-864-11	METAL CHIP	0	5%	1/16W
R065	1-218-716-11	METAL CHIP	10K	0.5%	1/16W
R066	1-218-716-11	METAL CHIP	10K	0.5%	1/16W
R068	1-216-839-11	METAL CHIP	33K	5%	1/16W
R082	1-216-833-11	METAL CHIP	10K	5%	1/16W
R083	1-216-833-11	METAL CHIP	10K	5%	1/16W
R084	1-216-833-11	METAL CHIP	10K	5%	1/16W

RF SWITCH

Ref. No.	Part No.	Description			Remark
R085	1-216-833-11	METAL CHIP	10K	5%	1/16W
R086	1-216-833-11	METAL CHIP	10K	5%	1/16W
R087	1-216-833-11	METAL CHIP	10K	5%	1/16W
R088	1-216-864-11	METAL CHIP	0	5%	1/16W
R089	1-216-864-11	METAL CHIP	0	5%	1/16W
R093	1-216-803-11	METAL CHIP	33	5%	1/16W
R094	1-216-803-11	METAL CHIP	33	5%	1/16W
R097	1-216-839-11	METAL CHIP	33K	5%	1/16W
R098	1-216-839-11	METAL CHIP	33K	5%	1/16W
**********					
*	1-641-764-13	SWITCH BOARD			
		**********			
		< CAPACITOR >			
C001	1-161-494-00	CERAMIC	0.022uF		25V
		< SWITCH >			
S001	1-571-300-11	SWITCH, ROTARY (LOADING IN)			
S002	1-571-300-11	SWITCH, ROTARY (LOADING OUT)			
**********					
		MISCELLANEOUS			
		**********			
102	1-757-931-11	WIRE (FLAT TYPE) (19 CORE)			
103	1-757-932-11	WIRE (FLAT TYPE) (19 CORE)			
104	1-757-098-11	WIRE (FLAT TYPE) (35 CORE)			
⚠159	1-558-568-21	CORD, POWER			
⚠552	8-820-132-03	DEVICE, OPTICAL (KHM-230AAA/J1RP)			
557	1-757-097-11	WIRE (FLAT TYPE) (25 CORE)			
M1	A-4604-347-A	MOTOR (L) ASSY (LOADING)			
⚠T401	1-437-363-11	TRANSFORMER, POWER (for DRIVE)			
⚠T402	1-437-362-11	TRANSFORMER, POWER (for AUDIO)			
**********					
		**********			
		HARDWARE LIST			
		**********			
#1	7-685-885-09	SCREW +BVTT 4X16 (S)			
#2	7-685-647-11	SCREW +BVTP 3X10 TYPE2 N-S			
#3	7-685-872-09	SCREW +BVTT 3X8 (S)			
#4	7-685-548-14	SCREW +BTP 3X12 TYPE2 N-S (GOLD)			
#4	7-685-548-19	SCREW +BTP 3X12 TYPE2 N-S (BLACK)			
#5	7-685-870-01	SCREW +BVTT 3X5 (S)			
#6	7-682-949-01	SCREW +PSW 3X10			
#7	7-685-646-79	SCREW +BVTP 3X8 TYPE2 N-S			
#8	7-685-872-09	SCREW +BVTT 3X8 (S)			
#9	7-688-003-12	W 3, MIDDLE			
#10	7-682-544-04	SCREW +P 3X3			
#11	7-685-871-09	SCREW +BVTT 3X6 (S)			
#12	7-624-105-04	STOP RING 2.3, TYPE -E			
* #13	7-685-903-21	BRACKET, YOKE			
#14	7-682-547-04	SCREW (+BVTT M3S)			
#15	7-682-548-09	SCREW (3X8)			
#17	7-685-147-11	SCREW +P 3X10 TYPE2 NON-SLIT			
#18	7-682-546-09	SCREW +B 3X5			
**********					

Ref. No.	Part No.	Description	Remark
		ACCESSORIES & PACKING MATERIALS	
		**********	
	1-476-598-11	REMOTE COMMANDER (RM-SX700)	
	1-757-960-21	CORD, CONNECTION (BLACK)	
	1-791-732-11	CORD, CONNECTION (RED/WHITE)	
	4-235-066-11	MANUAL, INSTRUCTION (ENGLISH)	
	4-235-066-21	MANUAL, INSTRUCTION (ENGLISH, FRENCH, GERMAN, SPANISH)	
	4-228-696-01	LID, BATTERY CASE (for RM-SX700)	

The components identified by mark ⚠ or dotted line with mark ⚠ are critical for safety.
Replace only with part number specified.

MEMO

REVISION HISTORY

Clicking the version allows you to jump to the revised page.
Also, clicking the version at the upper right on the revised page allows you to jump to the next revised page.

Ver.	Date	Description of Revision
1.0	2001.06	New